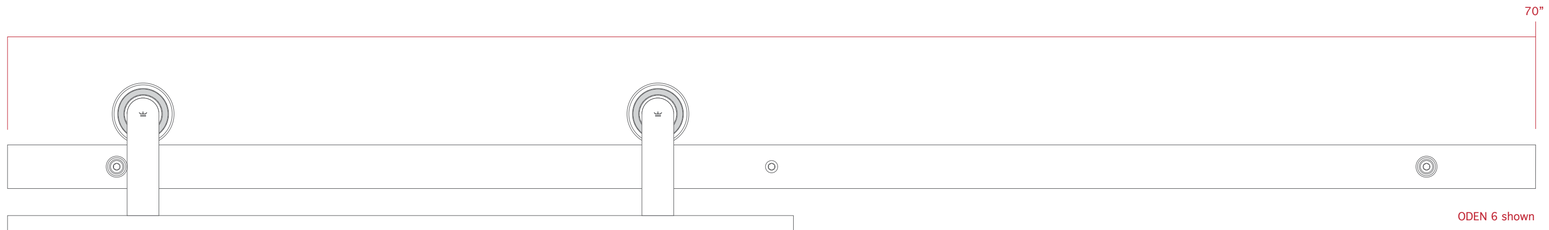

ODEN Top Mount:

Compatible with panels 1-3/8" to 3" in thickness.

Shown here mounted through 1/2" drywall, into double 2x4 blocking between studs.

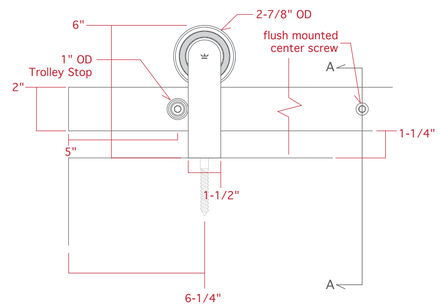

Section AA with single Track Mount Spacer
Maximum panel weight is 400 lbs

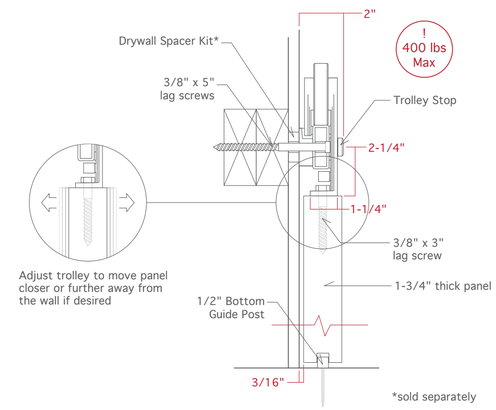

Section AA with double Track Mount Spacer
Maximum panel weight is 300 lbs

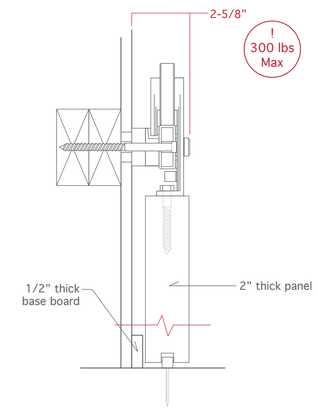

ODEN Face Mount:

Compatible with door panels 3/4" to 1-3/4" in thickness without base moldings or base board.

Shown here mounted through 1/2" drywall, into double 2x4 blocking between studs.

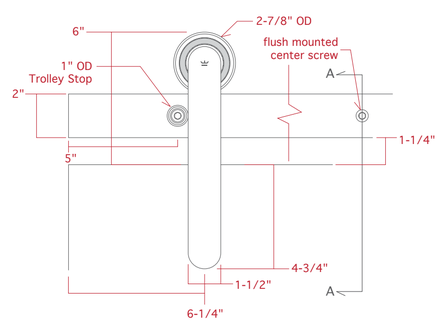

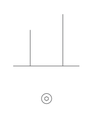

Section AA with single Track Mount Spacer
Maximum panel weight is 400 lbs

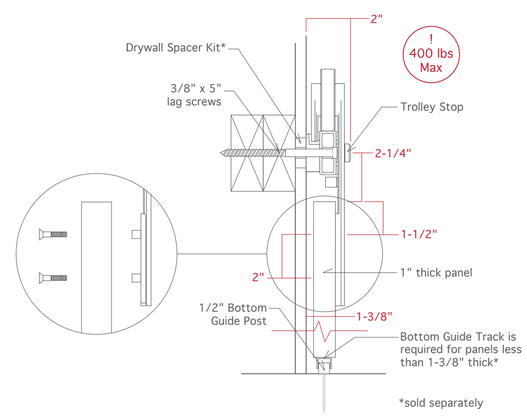

Section AA with double Track Mount Spacer
Maximum panel weight is 300 lbs

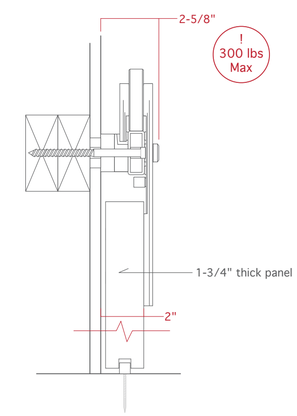

ODEN Glass:

Compatible with door panels 3/8" to 3/4" in thickness.

Shown here mounted through 1/2" drywall, into double 2x4 blocking between studs.

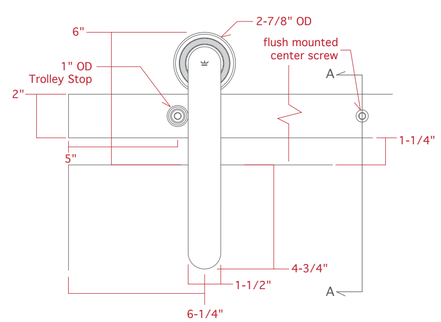

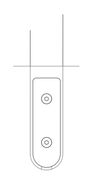

Section AA with single Track Mount Spacer
Maximum panel weight is 400 lbs

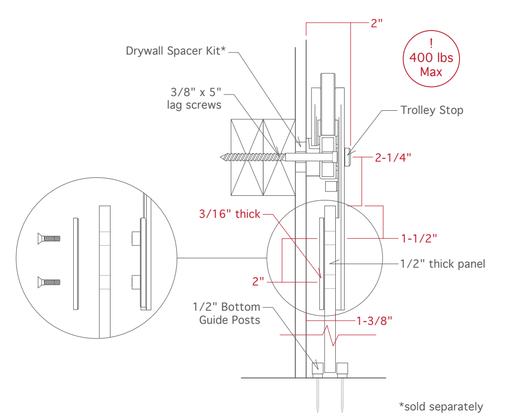

Section AA with double Track Mount Spacer
Maximum panel weight is 300 lbs

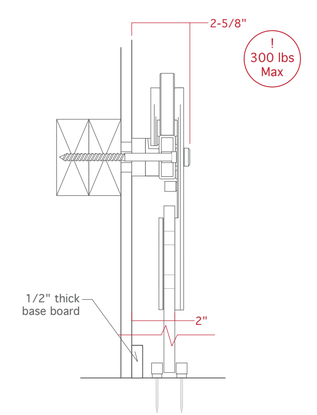

Product: ODEN
Date: January 5th 2015
FOR SPECIFICATION PURPOSES ONLY
PROPERTY OF KROWNLAB INC.