# BALDUR

## GLASS MOUNT

Modern, elegant sliding door hardware with a patented, industry-unique hubless design. Custom massive bearings provide Baldur's iconic movement. Made from high grade stainless steel and aluminum for a lifetime of flawless performance.

### UNIQUE FEATURES

- Tru-Level™ System provides 1/4" vertical and lateral adjustment at each mounting point
- Vertical panel adjustment for 1/4" of out-of-plumb adjustment
- Fully adjustable door stops
- Cut and drill track in field with commonly available tools
- Designed and manufactured in Portland, Oregon USA

### TRACK

- 12" increments between 4' and 13'
- Track Connectors available for installations where longer track lengths are required
- Predrilled or undrilled
- Made-to-measure available for any length and drill pattern

### COMPATIBLE WALL TYPES

- Framed Wood Wall (blocking required)
- Glass Wall
- Steel Beam
- Concrete

### OPTIONAL ACCESSORIES

- Door Pulls
- Drywall Inserts
- Shim Kits
- Perpendicular Wall Fitting

### TECHNICAL DETAILS

- Below ADA requirement for pull force at full weight
- Panel thickness: 3/8" and 1/2" (contact us if your panel is in different thickness)
- 10 year warranty

## QUICK LOOK

### FINISH OPTIONS

Brushed Stainless

Black Stainless

### CONFIGURATIONS

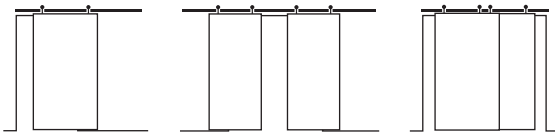

Single | Bi-Parting | Bypassing

### WEIGHT CAPACITY

400lb (contact us if your door panel is heavier)

### VOLUME PRICING

Available for orders over 10 units

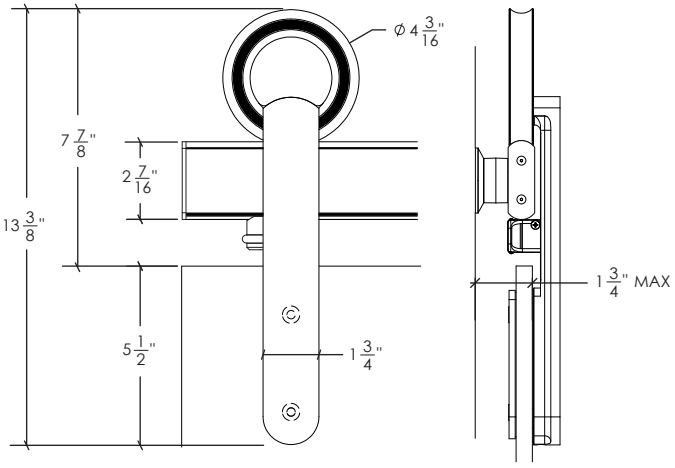


### ORDERING

To order Baldur Glass Mount, contact:
support @ krownlab.com
503-292-6998

### MORE INFORMATION

For all spec sheets visit:
www. krownlab.com/baldur

KROWNLAB

Visual product representations herein may differ from the actual products. Components and details are subject to improvement changes.
© 2017 Krownlab. All Rights Reserved. Krownlab and the Krownlab logo is registered Trademark of Krown Lab, Inc.