KROWNLAB®

INSTALLATION INSTRUCTIONS

PRODUCT: BALDUR + ODEN

CONFIGURATION: SINGLE DOOR
MOUNT: GLASS MOUNT

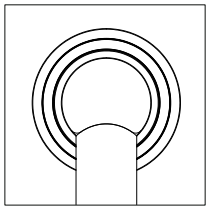

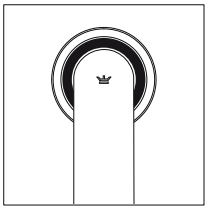

Product is covered by U.S. patents. For more information visit www.krownlab.com

1. TOOLS + MATERIALS REQUIRED

TOOLS

- Tape measure
- Imperial allen wrench kit
- Level
- Ratchet with 1/4", 3/8" and 1/2" sockets
- Torque wrench capable of measuring 110inlbs(9.5ftlbs)
- #2 Philips screw driver
- Power drill
- One or more of the following drill bits depending on product configuration:

  -13/64" metal drill bit for multiple-track systems
  -15/64" for soft wood blocking
  -1/4" drill for hard wood blocking

TOOLS FOR DRILLING AND CUTTING TRACK

- Miter saw and carbide toothed blade
- 1/2" to 11/16" metal drill bit (11/16" holes provide full 1/4" adjustment in any direction)

MATERIALS

- Blue painters tape
- Pencil or other non permanent marking tool
- Glass panels fabricated for your project

*System additions and optional accessories may require additional tools or materials. See instructions for each accessory for more details.

---

2. GLASS INSPECTION

INSPECTING GLASS

- Confirm dimensional accuracy
- Ensure holes are seamed and free of chips
- Ensure holes are properly sized
- Reference "Glass panel specifications" for additional information: www.krownlab.com/downloads

3. VERIFY ALL COMPONENTS

BASE KIT

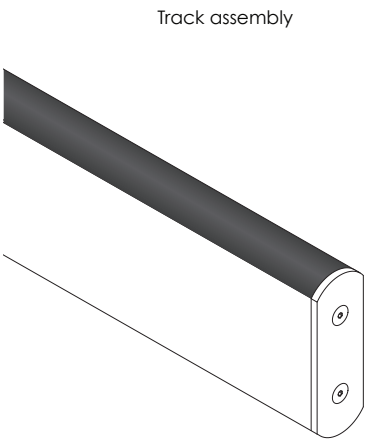

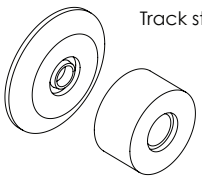

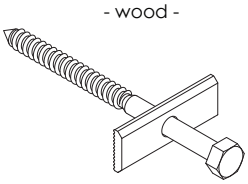

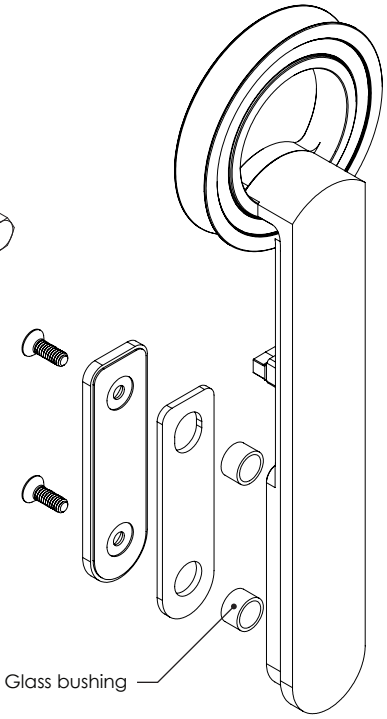

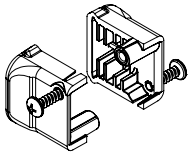

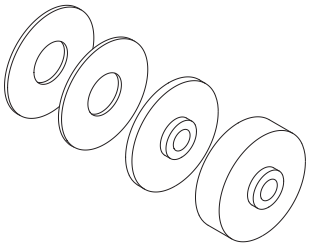

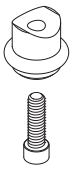

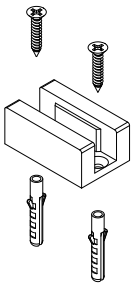

*Door guide included may differ.

** Illustration is based on Baldur

SYSTEM OPTIONS AND ADDITIONS

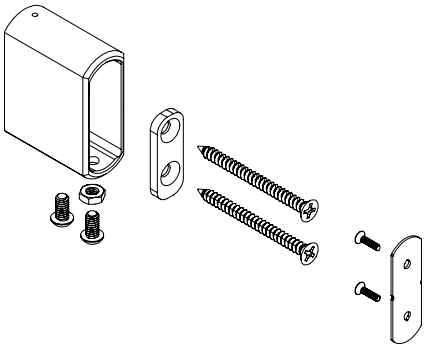

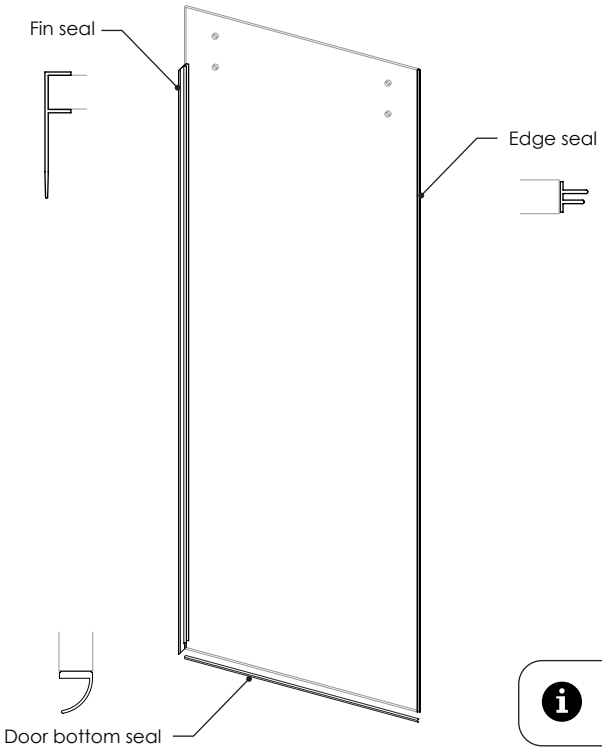

Go to our website for a complete range of door pulls and locks.

4. REMOVE TRACK COVER

① Remove the track from the protective sleeve.

② Gently pry the cover from the base with a slender plastic (non-marring) tool.

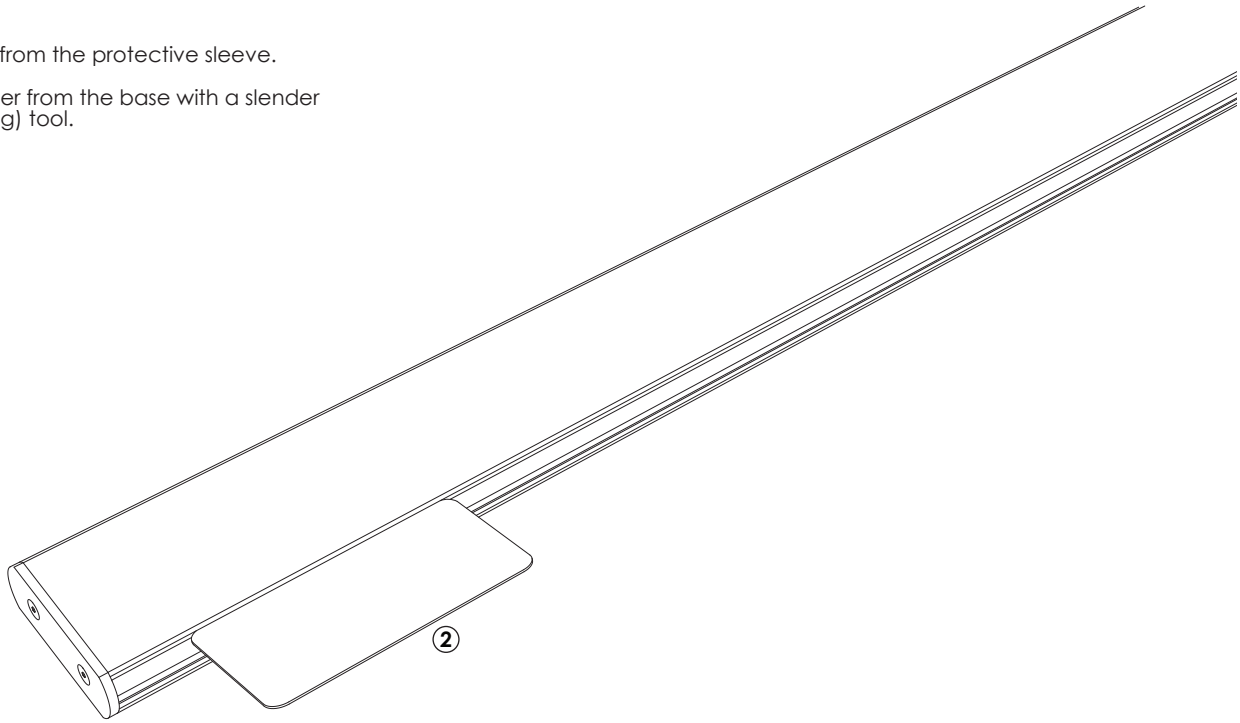

5. LOCATE TRACK ATTACHMENT POINTS

① Determine the height of the track centerline:

HEIGHT = DOOR PANEL HEIGHT + 3"

This will result in a 3/8" clearance between your door panel and the floor. Adjust if desired or necessary.

! Additional clearance can be achieved by the vertical adjustment feature on the trolleys. See step 20.

② Mark the track centerline on your wall. (If you run a length of painter's tape along your wall, you'll thank us later!)

③ On the wall, mark the desired location of the end point of your track, ideally so that it aligns with the edge of your door panel in the desired closed position.

④ Determine and mark the locations of all mounting points along the track centerline. If your track was pre-drilled, simply transfer the hole pattern from the track to the wall. If you purchased an un-drilled track, see step 6.

! Krownlab hardware requires a structural wall to function properly and safely. Each mounting point must engage an appropriate amount of structural material: Wood or metal framed walls must have 3" of solid blocking secured to studs or other framing members.

⚠ All glass panels must conform to Krownlab glass panel specifications.

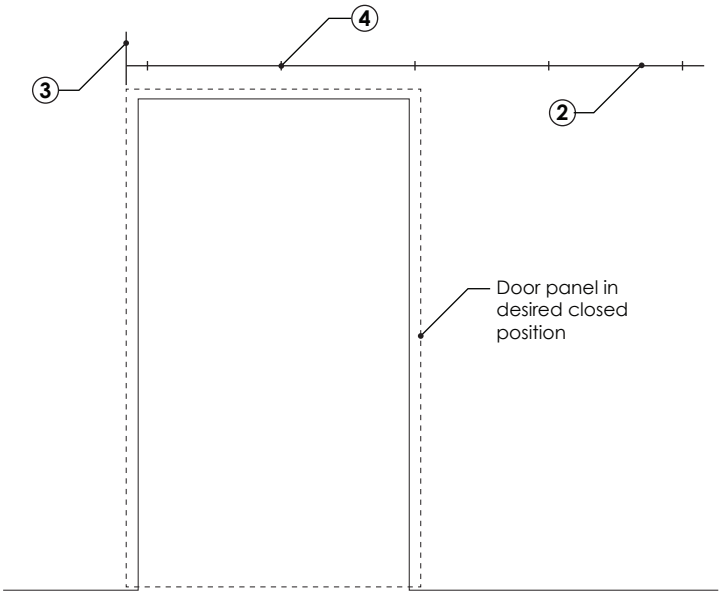

6. OPTIONAL STEP - UNDRILLED TRACK

If your track is undrilled, please refer to the included instructions to drill the track properly for the weight of your panel.

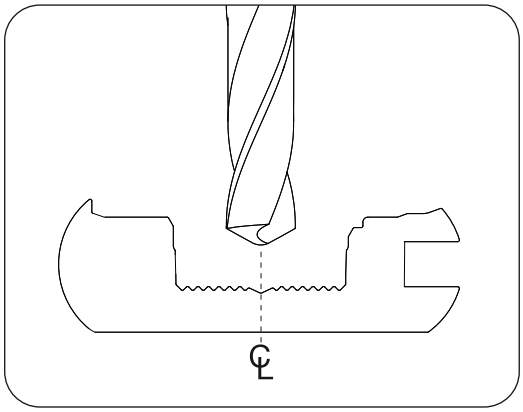

7. LINK MULTIPLE TRACKS

Track Connectors are included with multiple-track systems to keep the tracks in alignment. Skip to the next step for single-track installations.

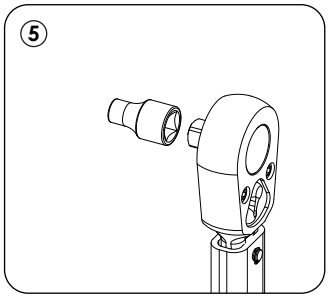

1. Using a 1/16" allen wrench, remove the end cap from the correct end of each track.
2. Butt tracks end to end as they will be installed on your wall. Using the track connector washer plate centered over the seam between the tracks as a template, mark each track for drilling.
3. Drill a 13/64" hole in each track.
4. Connect tracks by assembling the track connector washer plate as shown. Ensure that washer teeth align with teeth in the track before tightening fasteners.
5. Install a 3/8" socket onto a torque wrench and torque the nuts to 48 inch-lbs (4 ft-lbs). You may need to use a 1/8" allen wrench to prevent the screws from rotating while torquing.

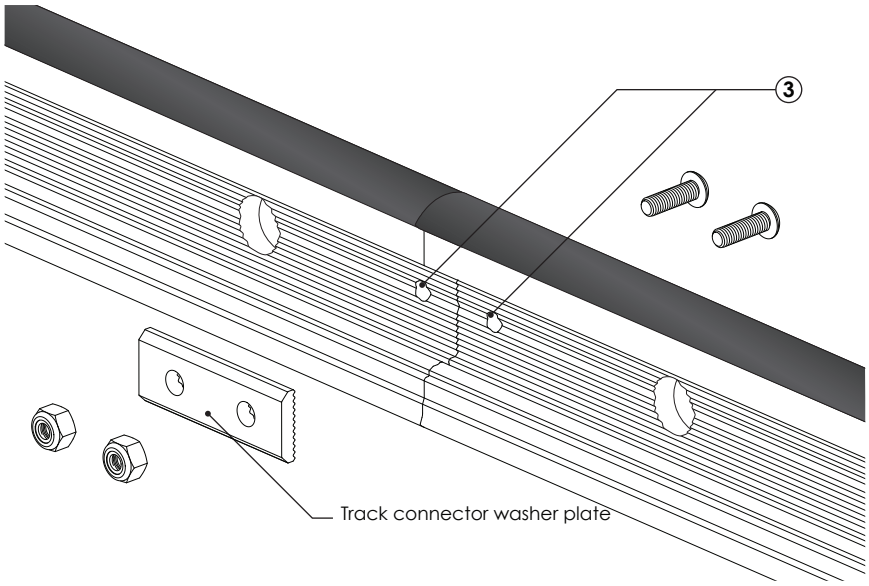

8. INSTALL DRYWALL INSERTS

This step is for walls with a non-structural surface only. I.e., drywall, pin-up board or other materials that are weaker than the wood blocking behind them. Skip to the next step for installations without these materials.

1. Use a 1-3/4" spade bit to remove the drywall at each mounting point.
2. Place a drywall insert into each drywall cavity.

! To perform their function, drywall inserts must be up against the structural material of your wall and flush with the finished surface of the drywall. If needed, use the included steel shims as shown.

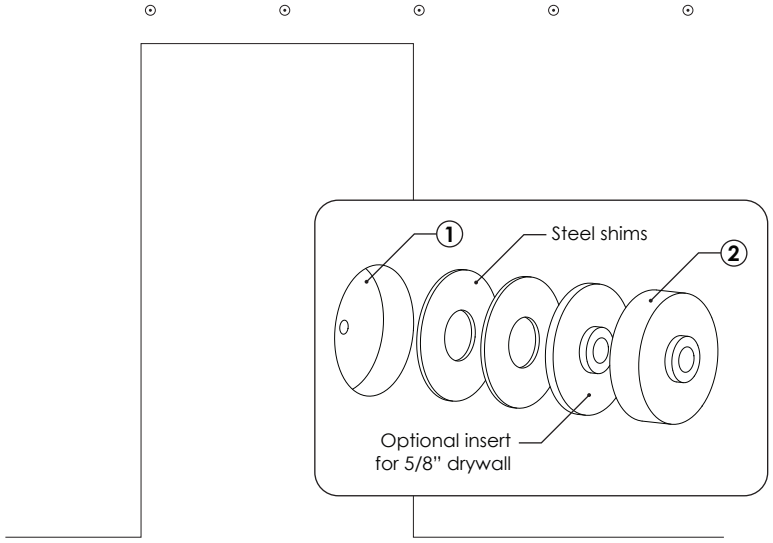

9. PREDRILL STRUCTURAL WALL

1. Drill a pilot hole for each mounting point.

! Make sure that each mounting point engages an appropriate amount of structural material: Wood or metal stud framed walls must have 3" of solid wood blocking secured to studs or other framing members. Predrill 15/64" pilot hole for lag into soft wood blocking. (1/4" for hardwood)

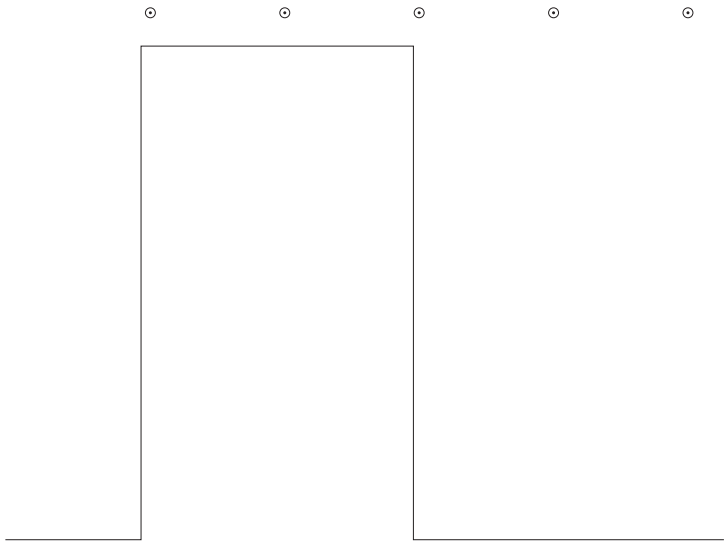

10. DETERMINE DESIRED WALL CLEARANCE

① Determine which components are needed to set desired wall clearance using the formula and table below.

DESIRED CLEARANCE * = PANEL DISTANCE - PANEL THICKNESS

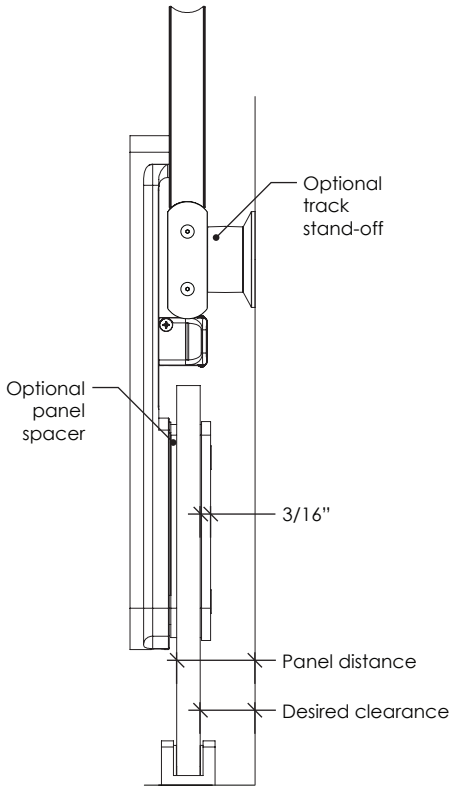

Panel distance	Required 1/4" track stand-off	Optional 3/4" track stand-off	Optional panel spacer
7/8"	√		√
1"	√		
1-5/8"	√	√	√
1-3/4"	√	√	

* If additional wall clearance is required, please contact support@krownlab.com

11. OPTIONAL STEP - INSTALL PERPENDICULAR WALL FITTING

If your order included a perpendicular track attachment, please proceed to the separate installation instructions to install the fitting. Once complete, resume the next step in these instructions.

Perpendicular wall fitting for glass walls.

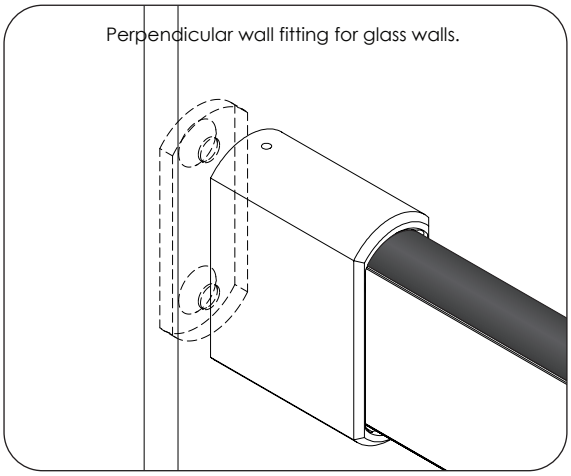

Perpendicular wall fitting for framed walls.

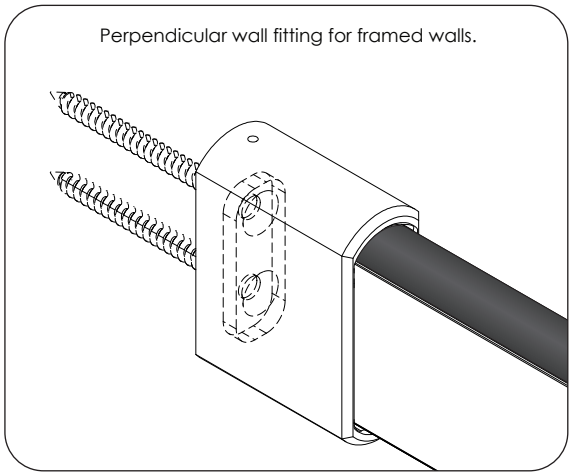

12. MOUNT TRACK TO WALL

① Slide springs to the ends of track, but keep 1" away from holes to prevent clamping a spring under track washer plate. Evenly space springs along the length of track to ensure the cover is well-retained.

② Ensuring that the black plastic track cap faces up, loosely install one end of your track with the appropriate track spacers and hardware.

③ Repeat with the opposite end of the track.

❗ Support the track assembly along its length if multiple tracks are linked together.

④ With both ends of the track now supported, loosely install the remaining mounting points.

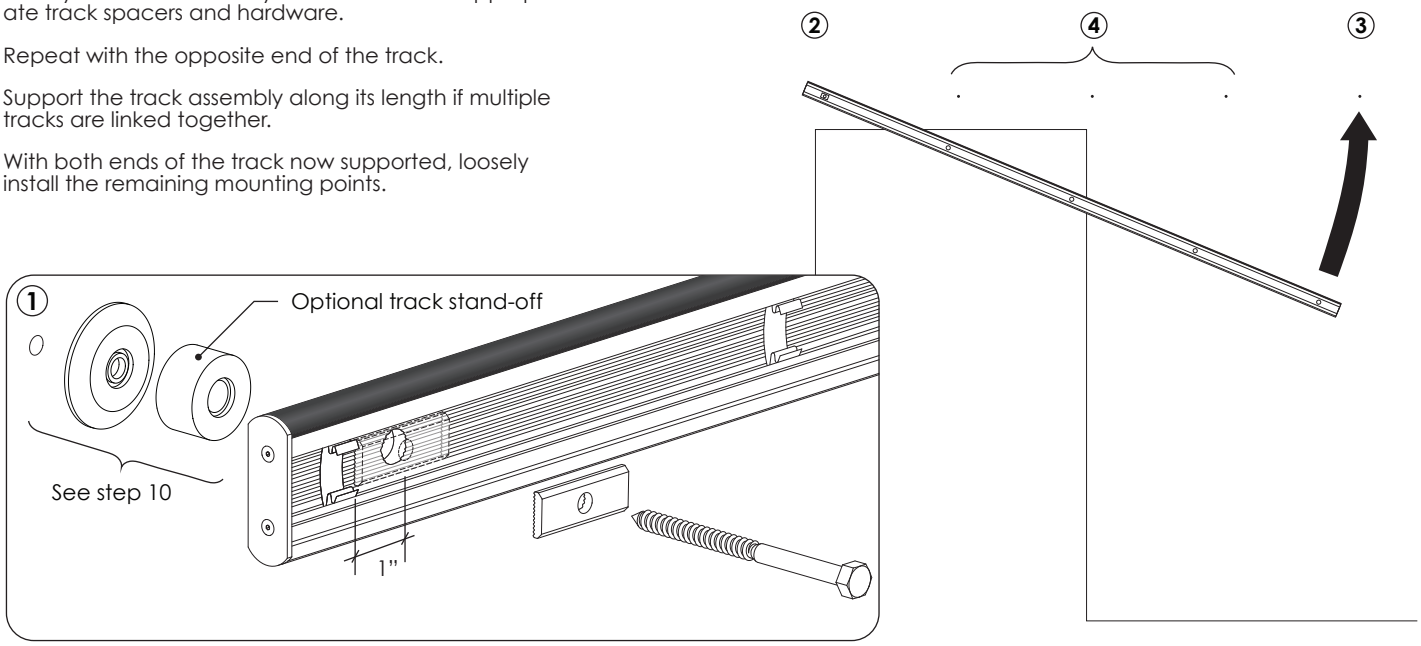

13. LEVEL AND ADJUST TRACK HEIGHT

① Snug, but don't yet tighten each track fastener starting at the center and moving toward the ends. For maximum adjustability, start by positioning the washer plate in the center (neutral) position.

❗ Be sure to account for sloped or uneven floor when setting track height.

② Use the Tru-Level™ System to make sure track is level: adjust the position of the washer plate at each mounting point until track is level.

❗ Ensure that washer teeth align with teeth in the track before tightening fasteners.

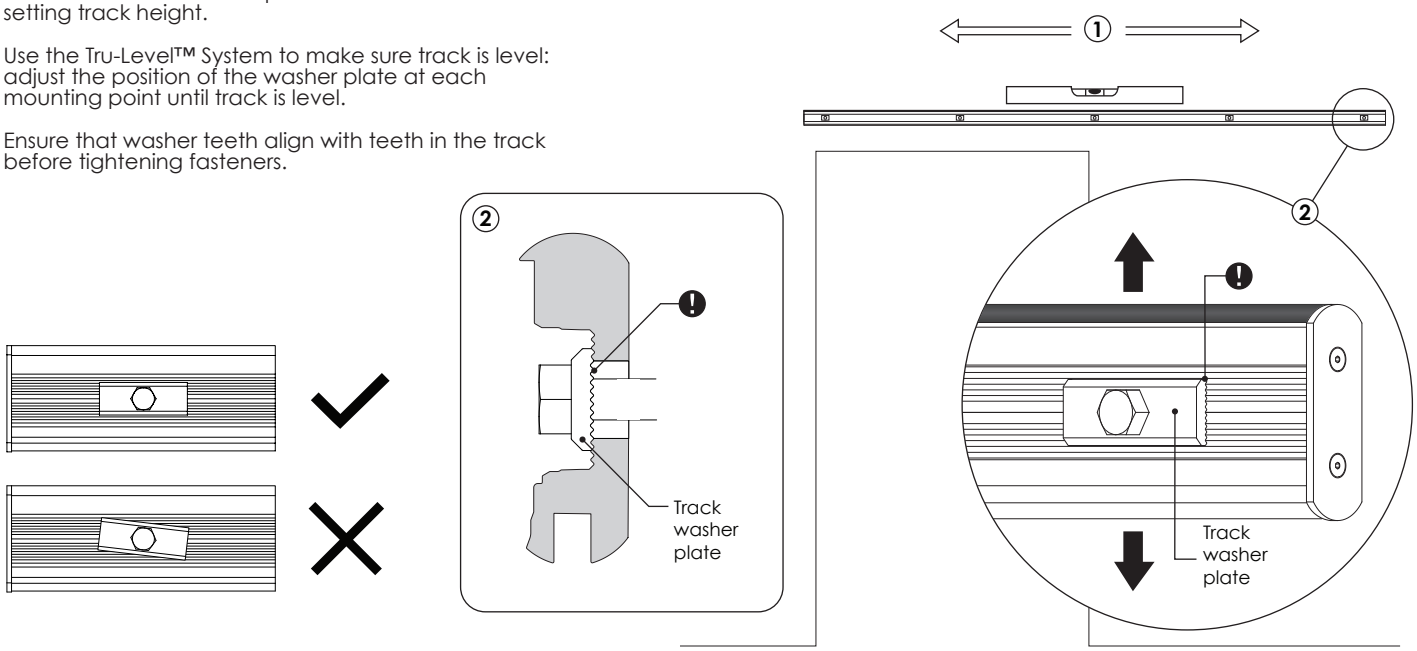

14. OPTIONAL STEP - INSTALL TRACK SHIMS

① Sight down the length of your track to determine if unevenness in the wall is causing your track to bow. If necessary:

② Loosen track attachment points as needed and insert shims from below. Ensure that the opening of the shim faces up. Start with one of the thinner shims, adding and swapping shims as needed until the track is straight to within the thickness of one shim.

❗ Never use more than one shim kit at any mounting point. Track shims may only be used at mounting points that pull the track out of true.

NOTE: Bowing in the track will negatively affect the performance of the entire system, causing increased friction and excessive wear on some components. Krownlab's warranty does not cover wear caused by improper installation.

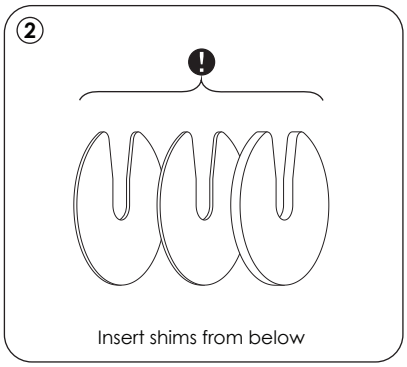

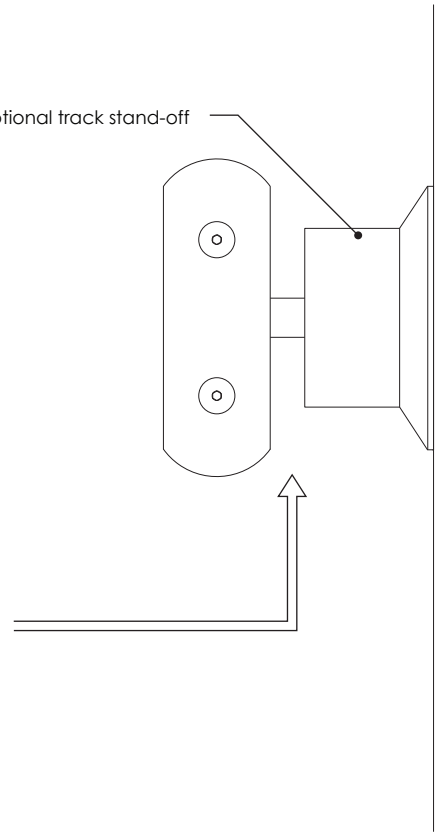

⚠ Do not use shims with the purpose to extend the track standoff distance.

15. SECURE TRACK TO WALL

❗ If installing Premium Door Stops, reference those installation instructions in parallel.

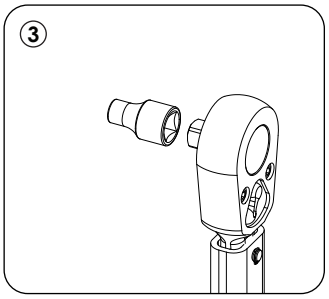

① Confirm the track has been leveled, shimmed, and all mounting points have been securely fastened.

② Inspect each track spring to ensure they are not interfering with the mounting hardware and evenly spaced along the length of the track.

③ Install 1/2" socket onto a torque wrench and torque the track bolts to 120 inch-lbs (10 ft-lbs).

④ Carefully reattach the track cover.

⑤ Confirm the track cover is fully seated and securely attached along the length.

❗ Ensure that the arrow on the inside of the track cover is facing up.

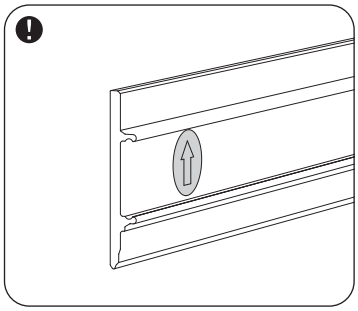

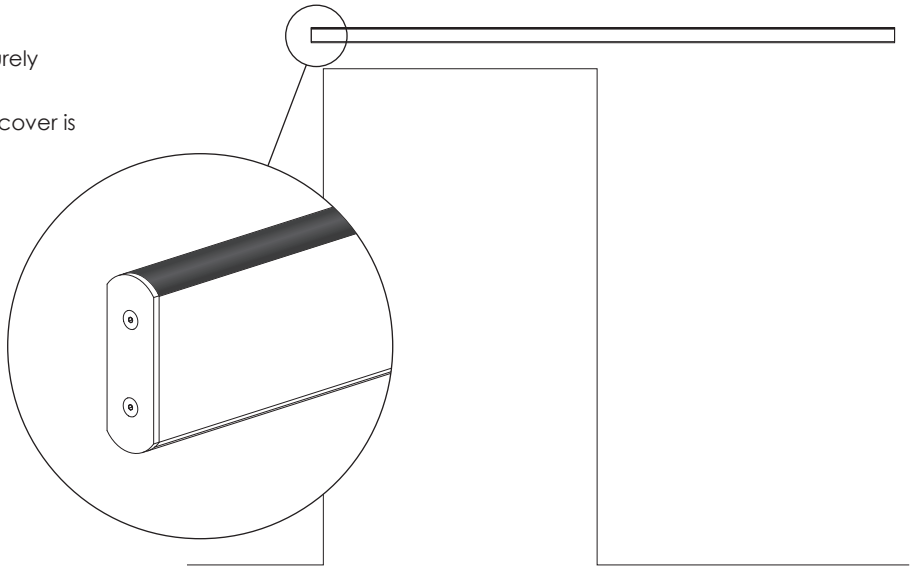

16. ATTACH DOOR STOPS

If installing Premium Door Stops, reference those installation instructions in parallel.

1. Locate the preinstalled nuts in the bottom of the track. Loosely screw a door stop to each nut.
2. Temporarily slide one door stop to each end of the track. Do not tighten the stops yet.

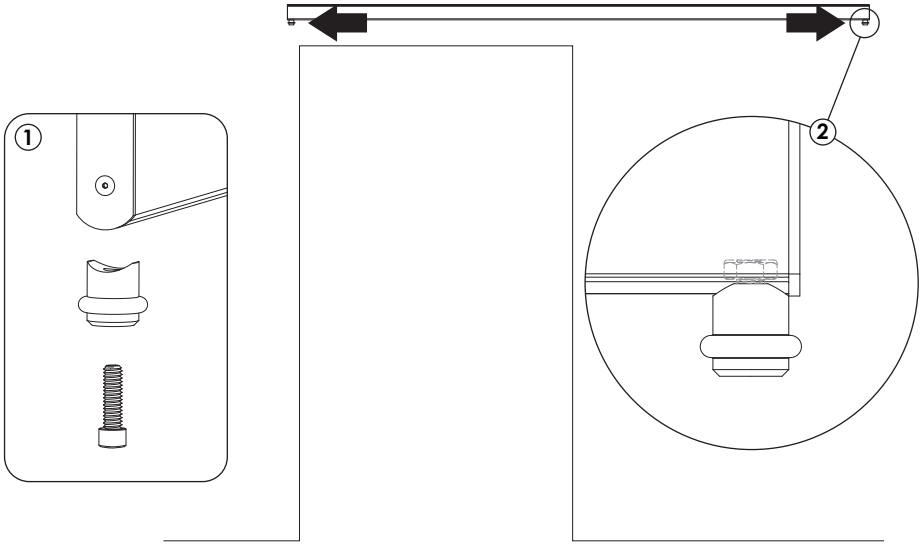

17. VERIFY DOOR PANEL SPECIFICATIONS

1. Ensure the glass door panel has the correct hole placement, hole sizing, and is prepared per Krownlab's glass panel specifications.
2. Inspect glass for any defects, e.g. chips, deformations, or irregularly shaped holes.

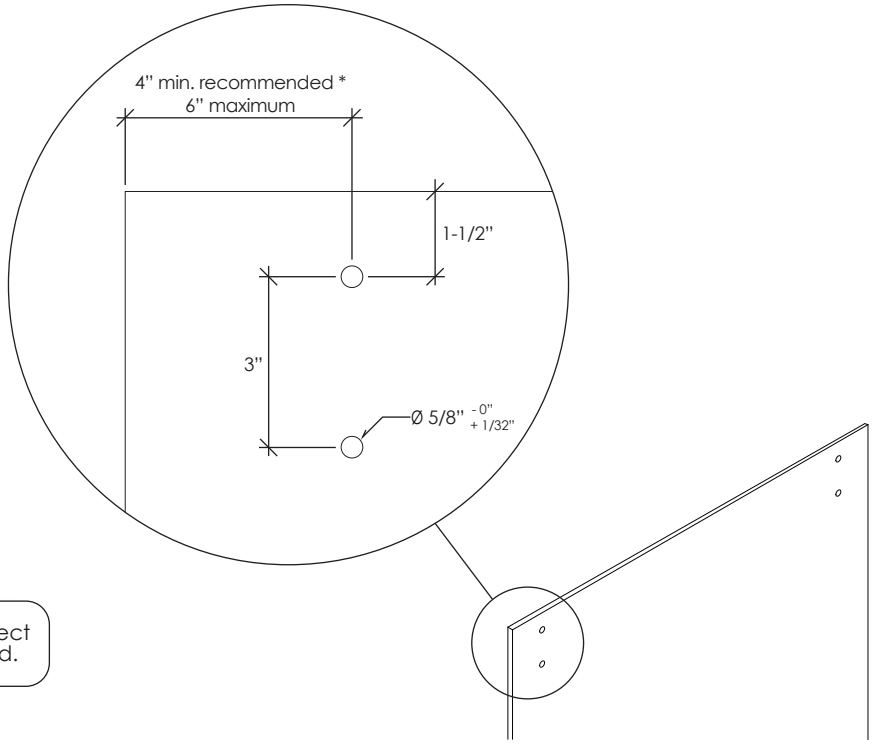

Do not use the glass with any defects!!!! Any defect is a safety hazard and the glass must be replaced.

* Facilitates easier door guide installation in step 21.

18. ATTACH TROLLEYS TO DOOR PANEL

① Attach the trolleys using the correct length fastener:

- 3/4" screws for 3/8" thick panel
- 1" screws for 1/2" thick panel

② Gently tighten, then back out each screw a half turn. This will allow you to adjust the panel height after installation.

③ Carefully hang your panel.

❗ Do not yet install your door pulls or other door hardware.

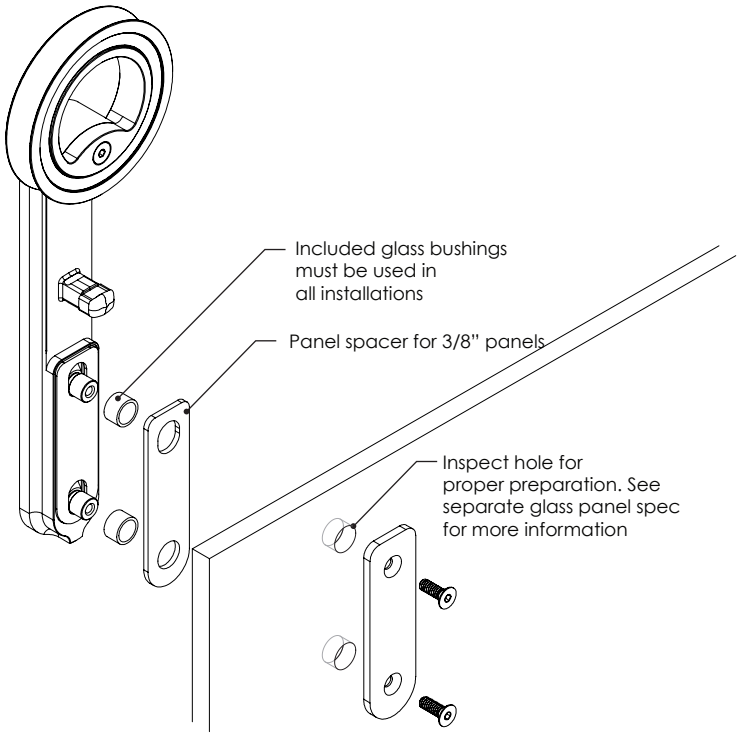

19. INSTALL SAFETY STOPS

❗ If installing Premium Door Stops, reference those installation instructions in parallel.

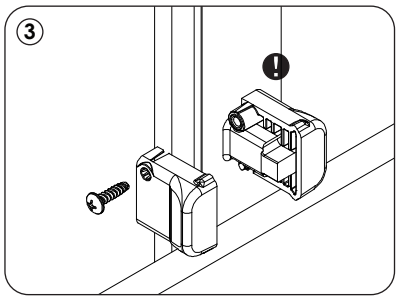

① Remove protective cap from trolley post.

② Place one safety stop on the trolley post.

❗ Ensure the safety stop is fully seated and properly aligned so this half of the post is completely covered by the safety stop.

③ Slide the second safety stop over the other side of the post.

❗ Ensure that both safety stops are aligned and fully seated.

④ Thread provided screws into both sides of the safety stops using a #2 Phillips Screw Driver and lightly tighten.

⑤ Repeat above steps for second trolley.

NOTE: Please keep the protective cap and reuse when removing and rehanging panel to prevent damage to your track.

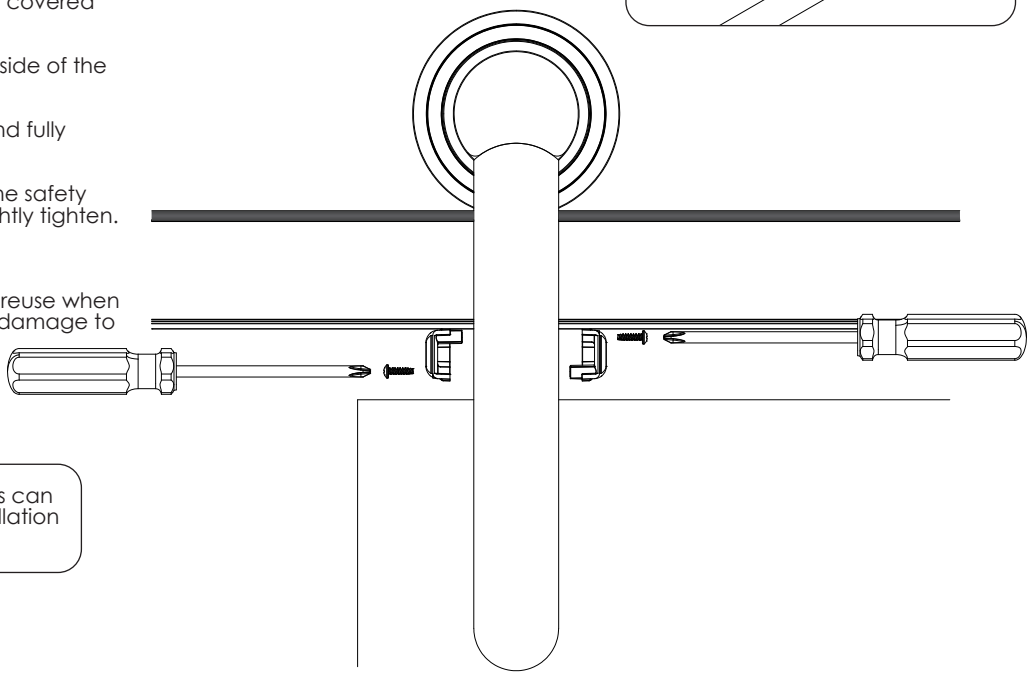

⚠ Not following the above instructions can cause a hazardous condition. Installation with both screws is mandatory.

20. ADJUST PANEL HEIGHT

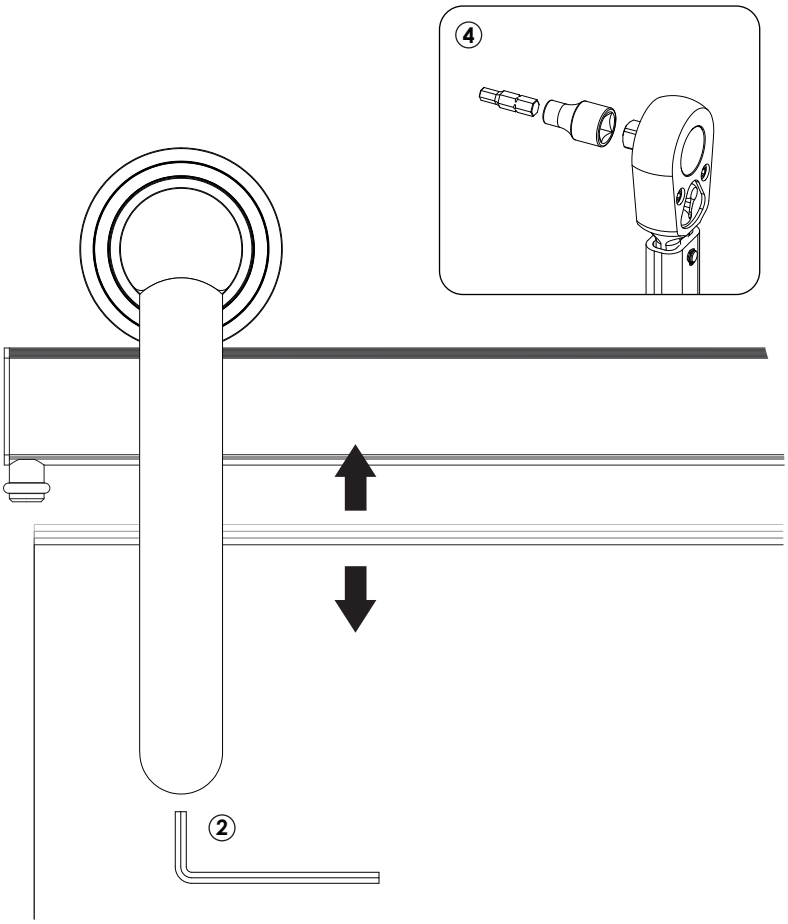

1. Check for any interference due to an uneven floor by sliding the panel back and forth.
2. If necessary, adjust the height of the panel by loosening the set screws at the bottom of each trolley with a 1/8" allen wrench. Trolleys are shipped in the up position.
3. After the panel height has been adjusted, tighten the trolley screws by hand with a 5/32" allen wrench on the backside of the panel.
4. Insert a 5/32" hex bit into a 1/4" socket on a torque wrench, and torque trolley screws to 108 inch-lbs (9 ft-lbs).

! If additional vertical adjustment is required, unhang the door panel, remove the track cover, and adjust the track up or down as needed.

21. INSTALL GLASS DOOR GUIDE

Refer to the separate installation instructions for the door guide that is included with your order. Once installed, return to this document for next steps.

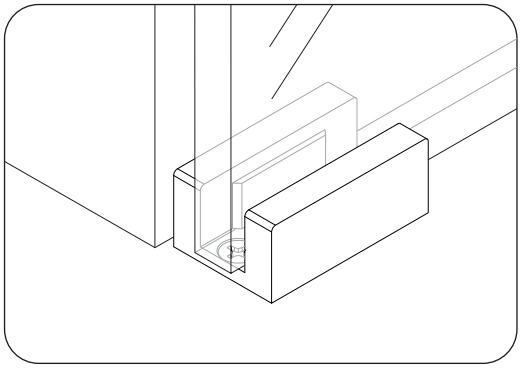

22. INSTALL DOOR PULLS

① If applicable, install door pulls following applicable installation instructions.

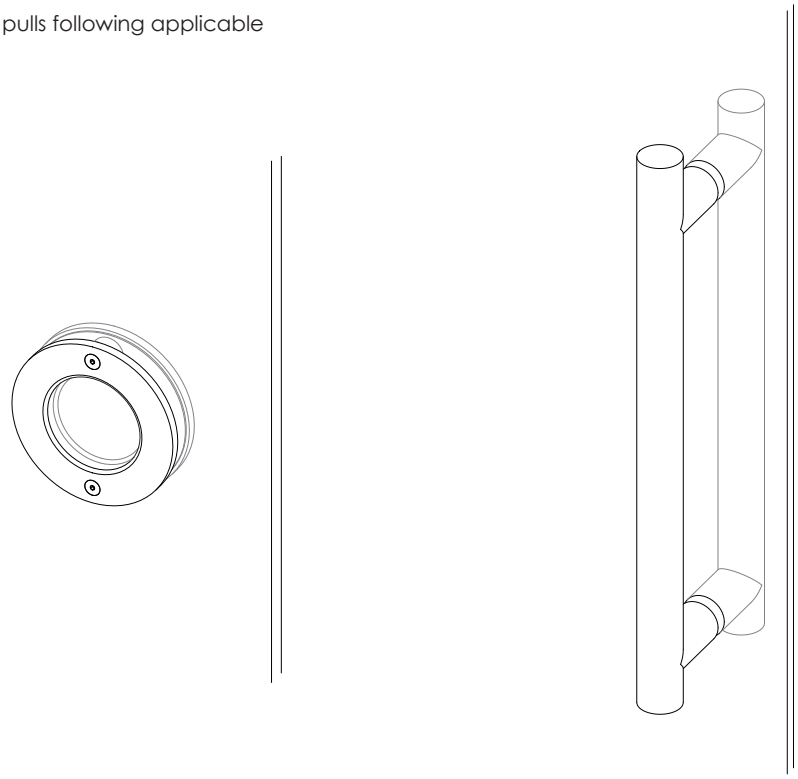

23. SET DOOR TRAVEL

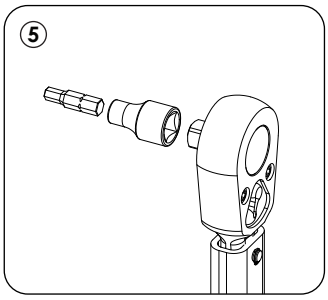

① With the door in the desired closed position, slide the door stop so that it touches the safety stop of the nearby trolley.

❗ Note any protruding door pulls!

② Repeat with the door in the open position, sliding the door stop so that it touches the safety stop of the nearby trolley.

❗ Verify that the door guide is properly engaged in the fully open and fully closed positions.

③ Tighten the door stops in place by hand with a 3/16" allen wrench.

④ Confirm locations haven't shifted while tightening. Adjust if needed.

⑤ Insert a 3/16" hex bit into a 1/4" socket on a torque wrench, and torque to 110 inch-lbs (9.5 ft-lbs).

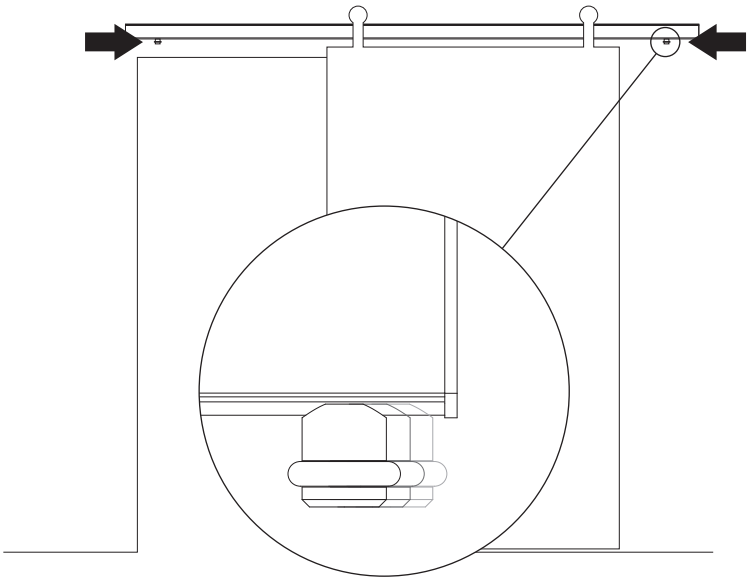

24. MAINTENANCE AND CARE

Routine Maintenance:

- Periodically check tightness of fasteners, particularly in high-use installations.
- Using a dry cloth, wipe bearing and wheel wearing surfaces and remove any build-up of dust or debris every few thousand cycles or every few months, whichever comes first.
- Bearings without seals should occasionally be lubricated with bearing oil. (e.g. SHC 630 Synthetic Gear and Bearing Oil by Exxon Mobil Corp: www.mobil.com)

Chemicals:

- This product contains elastomers, polymers, adhesives and special finishes. Chemicals must be checked for compatibility before using on product.
- Never use ammonia-based cleaners or anaerobic thread lockers on or near product.

Cleaning:

- To clean any time after installation, use a clean and dry non-abrasive lint free cloth. A mild soap may be used if extra cleaning is needed. (Remember to test an inconspicuous area prior to cleaning hardware)
- Select Black Stainless parts like the bearings can be re-enhanced with furniture style carnauba wax. If needed, apply a thin coating with a clean cloth, let dry, then buff clean. Do not apply to plastic or rubber components.
- Do not use steel wool, or a Scotch Brite pad, as it can scratch the product.

Visual product representations herein may differ from the actual products. Components and details are subject to improvement changes.

© 2018 Krownlab. All Rights Reserved. Krownlab and the Krownlab logo is registered Trademark of Krown Lab, Inc.

KROWNLAB®

INSTALLATION INSTRUCTIONS

PRODUCT: BALDUR + ODEN

CONFIGURATION: SINGLE DOOR
MOUNT: GLASS WALL

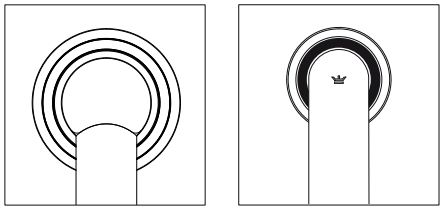

Product is covered by U.S. patents. For more information visit www.krownlab.com

1. TOOLS + MATERIALS REQUIRED

REQUIRED TOOLS

- Tape measure
- Imperial allen wrench kit
- Level
- Ratchet with 1/4", 3/8" and 1/2" sockets
- Torque wrench capable of measuring 110inlbs(9.5ftlbs)
- #2 Philips screw driver
- Power drill (for multiple track systems, undrilled track, or customizing track.)
- 13/64" metal drill bit for multiple-track systems

TOOLS FOR DRILLING AND CUTTING TRACK

- Miter saw and carbide toothed blade
- 1/2" to 11/16" metal drill bit (11/16" holes provide full 1/4" adjustment in any direction)

MATERIALS

- Blue painters tape
- Pencil or other non permanent marking tool
- Glass panels fabricated for your project
- Clear glazing silicone
- Plastic Shimming material
- Structural Hardware to support transom
- Bottom glazing channel (optional)

*System additions and optional accessories may require additional tools or materials. See instructions for each accessory for more details.

---

2. GLASS INSPECTION

INSPECTING GLASS

- Confirm dimensional accuracy
- Ensure holes are seamed and free of chips
- Ensure holes are properly sized
- Reference "Glass panel specifications" for additional information: www.krownlab.com/downloads

3. VERIFY ALL COMPONENTS

BASE KIT

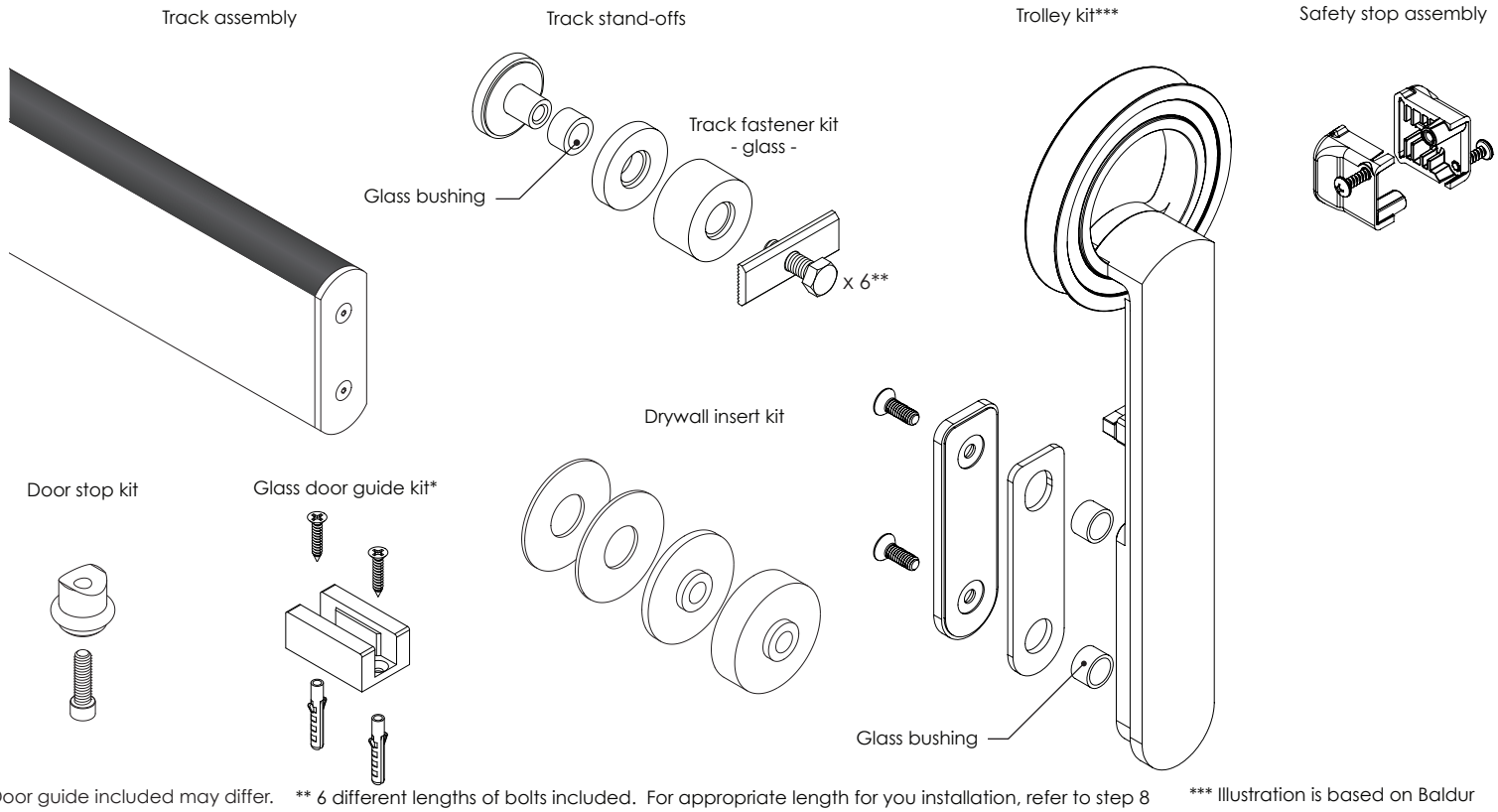

*Door guide included may differ. ** 6 different lengths of bolts included. For appropriate length for you installation, refer to step 8 *** Illustration is based on Baldur

SYSTEM OPTIONS AND ADDITIONS

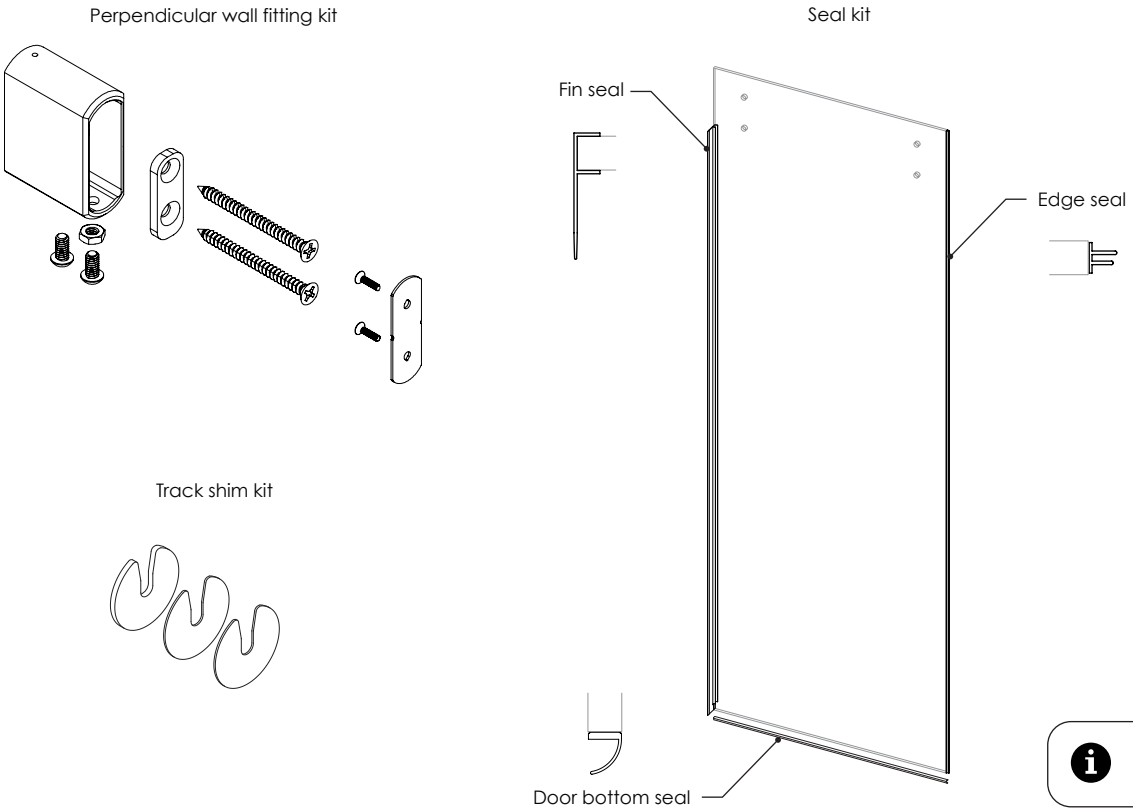

Go to our website for a complete range of door pulls and locks.

4. REMOVE TRACK COVER

① Remove the track from the protective sleeve.

② Gently pry the cover from the base with a slender plastic (non-marring) tool.

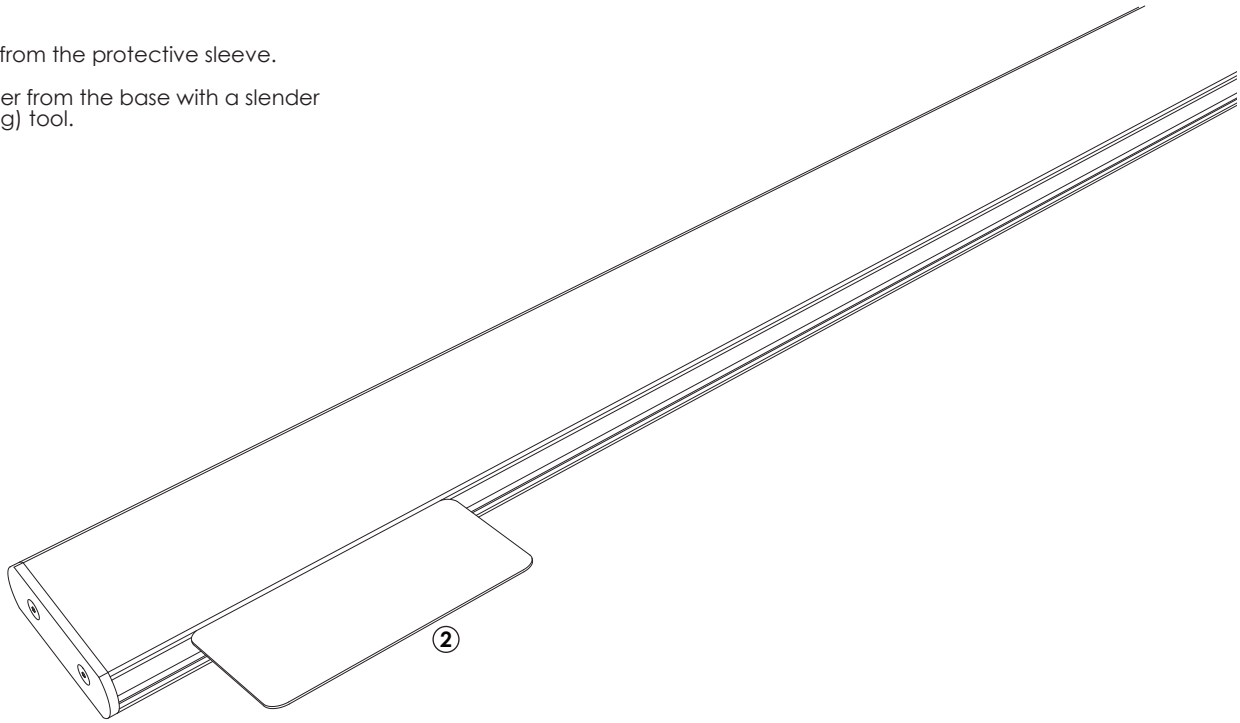

5. LOCATE TRACK ATTACHMENT POINTS

① Determine the height of the track centerline:

HEIGHT = DOOR PANEL HEIGHT + 3"

This will results in a 3/8" clearance between your door panel and the floor. Additional clearance can be achieved by the vertical adjustment feature on the trolleys. See step 18.

② Confirm that the hole spacing in your glass wall matches your track.

! Krownlab hardware requires a structural wall to function properly and safely, and may not be used as a structural member. The glass wall (side-lites, transom, etc) must be engineered to support Krownlab hardware.

⚠ All glass panels must conform to Krownlab glass panel specifications.

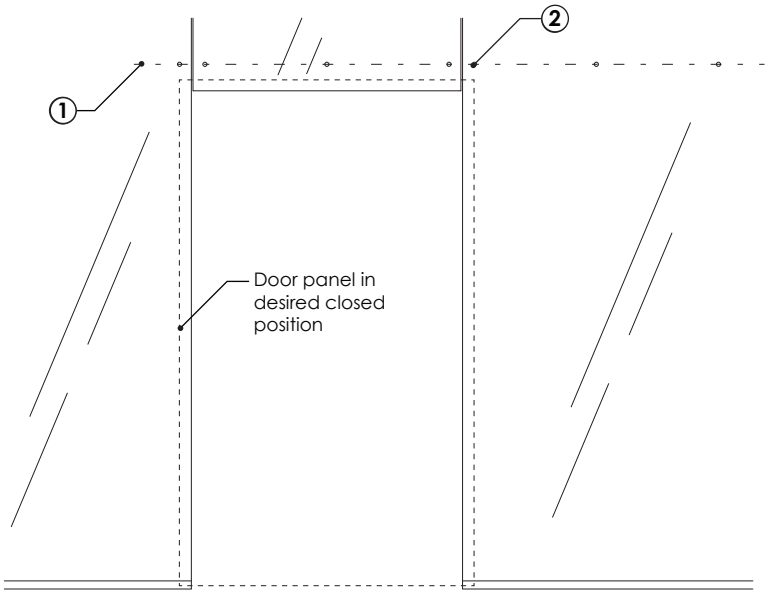

6. DRILL TRACK

Please refer to the included instructions to drill the track properly for the weight of your panel.

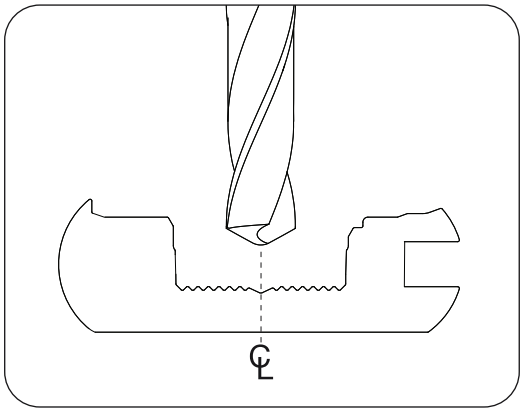

7. LINK MULTIPLE TRACKS

Track Connectors are included with multiple-track systems to keep the tracks in alignment. Skip to the next step for single-track installations.

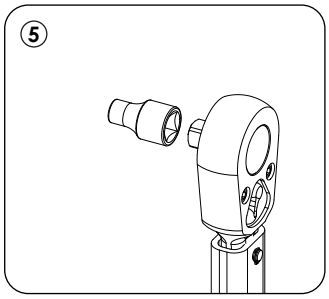

1. Using a 1/16" allen wrench, remove the end cap from the correct end of each track.
2. Butt tracks end to end as they will be installed on your wall. Using the track connector washer plate centered over the seam between the tracks as a template, mark each track for drilling.
3. Drill a 13/64" hole in each track.
4. Connect tracks by assembling the track connector washer plate as shown. Ensure that washer teeth align with teeth in the track before tightening fasteners.
5. Install a 3/8" socket onto a torque wrench and torque the nuts to 48 inch-lbs (4 ft-lbs). You may need to use a 1/8" allen wrench to prevent the screws from rotating while torquing.

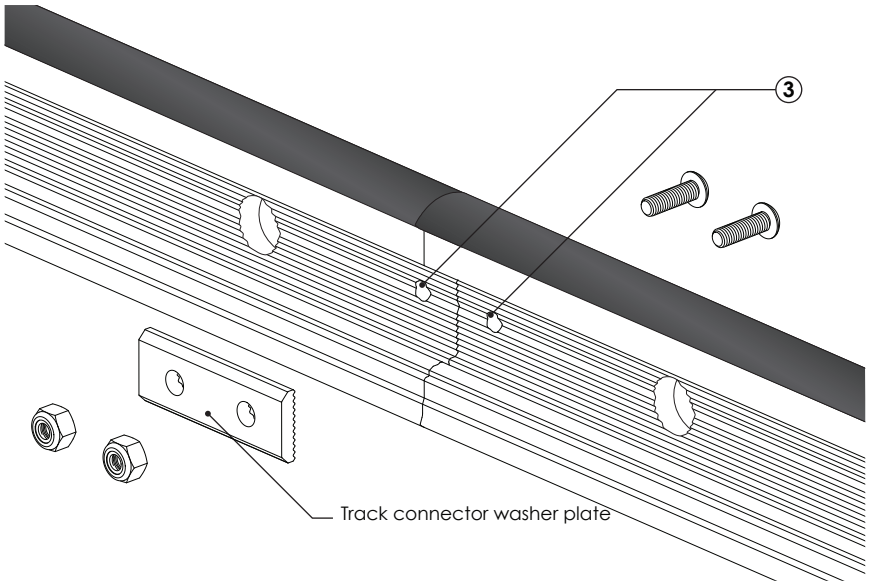

8. DETERMINE DESIRED WALL CLEARANCE

① Determine which components are needed to set desired wall clearance using the formula and table below.

DESIRED CLEARANCE * = PANEL DISTANCE - PANEL THICKNESS

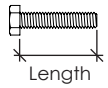

Panel distance	1/4" track stand-off	3/4" track stand-off	Optional panel spacer	Correct bolt lengths based on glass wall thickness	
				3/8"	1/2"
7/8"	√		√	7/8"	1"
1"	√			7/8"	1"
1-3/8"		√	√	1-3/8"	1-1/2"
1-1/2"		√		1-3/8"	1-1/2"
1-5/8"	√	√	√	1-5/8"	1-3/4"
1-3/4"	√	√		1-5/8"	1-3/4"

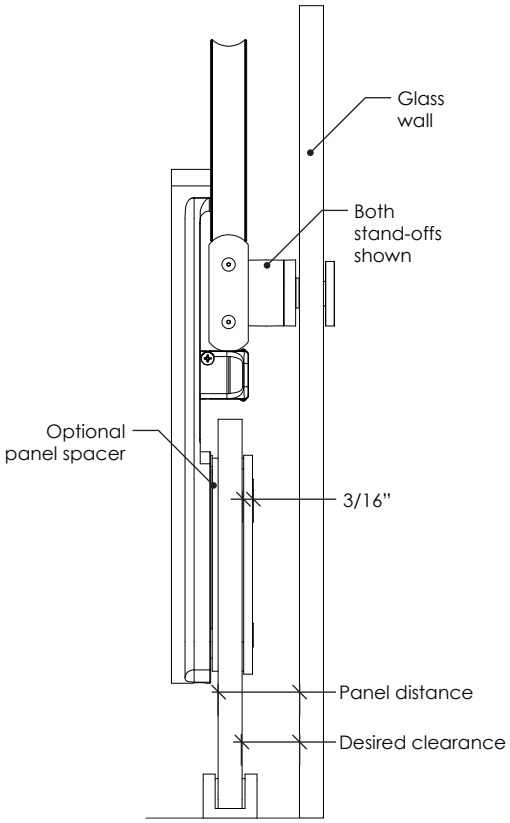

* If additional wall clearance is required, please contact support@krownlab.com

9. OPTIONAL STEP - INSTALL PERPENDICULAR WALL FITTING

If your order included a perpendicular track attachment, please proceed to the separate installation instructions to install the fitting. Once complete, resume the next step in these instructions.

Perpendicular wall fitting for glass walls.

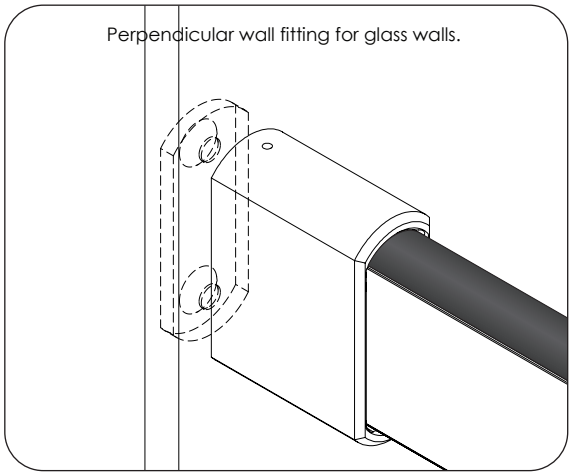

Perpendicular wall fitting for framed walls.

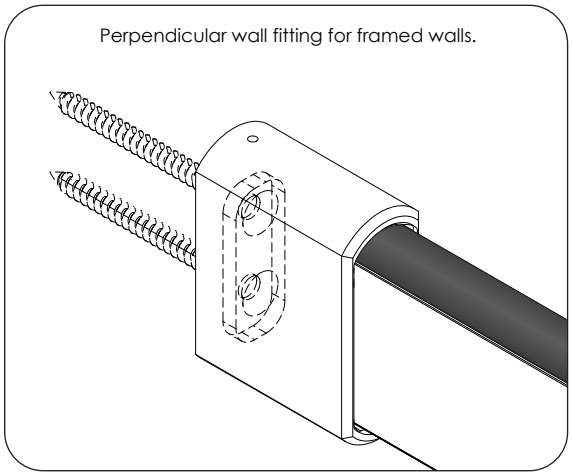

10. MOUNT TRACK TO WALL

① Slide springs to the ends of track, but keep 1" away from holes to prevent clamping a spring under track washer plate. Evenly space springs along the length of track to ensure the cover is well-retained.

② Ensuring that the black plastic track cap faces up, loosely install one end of your track using the correct length fastener as shown in the table in step 8.
Glass bushings should fit in holes with minimal play.

❗ All track glass nuts come pre-assembled with glass bushings. Glass bushings must be used in all installations.

③ Repeat with the opposite end of the track.

❗ Support the track assembly along its length if multiple tracks are linked together.

④ With both ends of the track now supported, loosely install the remaining mounting points.

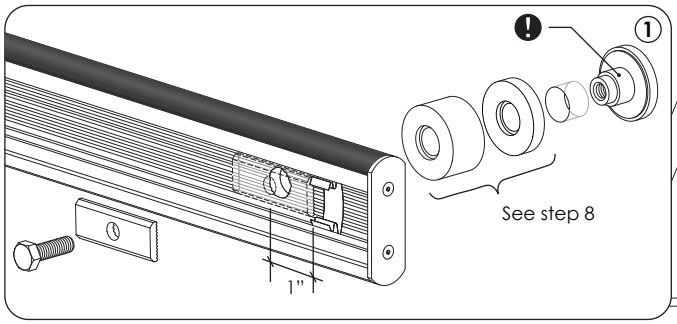

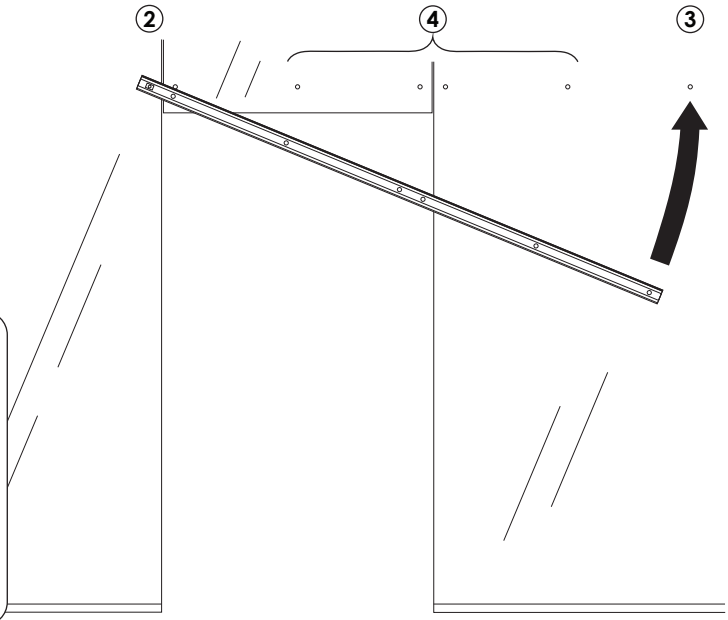

11. LEVEL AND ADJUST TRACK HEIGHT

① Snug, but don't yet tighten each track fastener starting at the center and moving toward the ends. For maximum adjustability, start by positioning the washer plate in the center (neutral) position.

❗ Be sure to account for sloped or uneven floor when setting track height.

② Use the Tru-Level™ System to make sure track is level: adjust the position of the washer plate at each mounting point until track is level.

❗ Ensure that washer teeth align with teeth in the track before tightening fasteners.

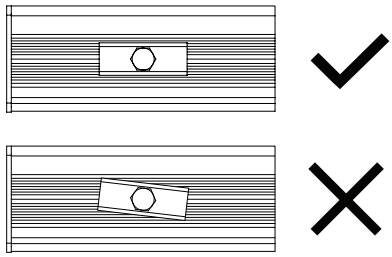

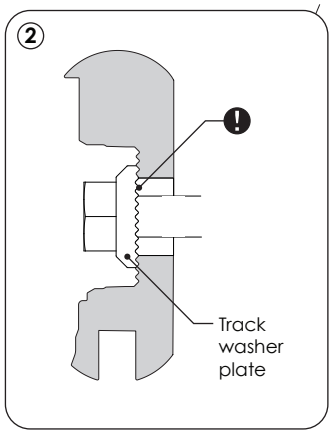

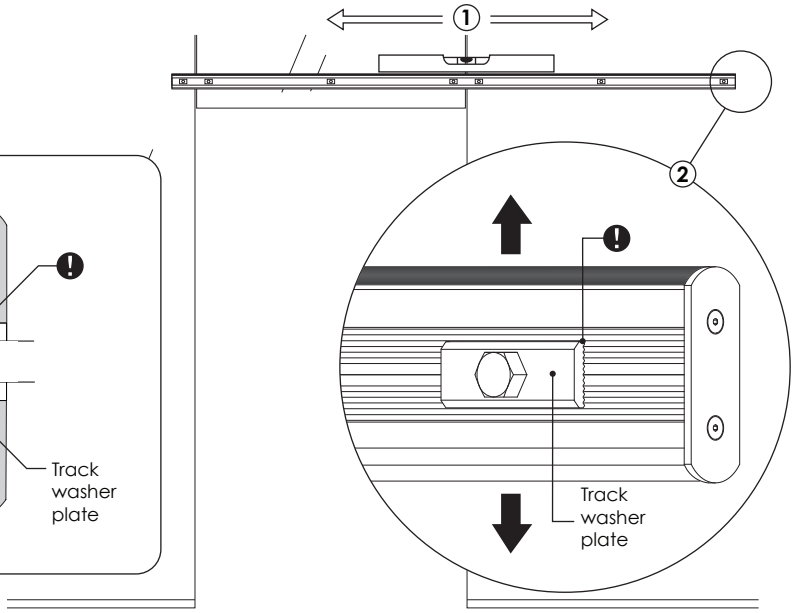

12. OPTIONAL STEP - INSTALL TRACK SHIMS

① Sight down the length of your track to determine if unevenness in the wall is causing your track to bow. If necessary:

② Loosen track attachment points as needed and insert shims from below. Ensure that the opening of the shim faces up. Start with one of the thinner shims, adding and swapping shims as needed until the track is straight to within the thickness of one shim.

❗ Never use more than one shim kit at any mounting point. Track shims may only be used at mounting points that pull the track out of true.

NOTE: Bowing in the track will negatively affect the performance of the entire system, causing increased friction and excessive wear on some components. Krownlab's warranty does not cover wear caused by improper installation.

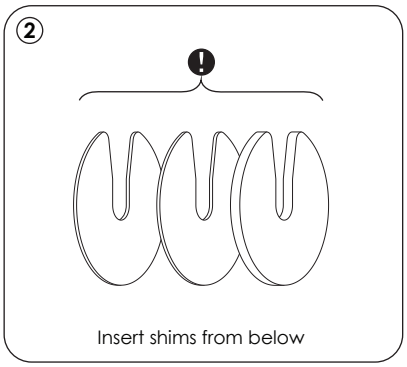

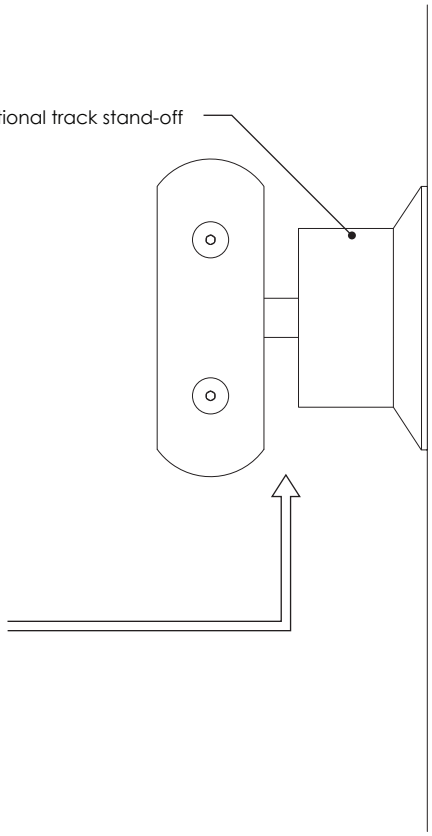

⚠ Do not use shims with the purpose to extend the track standoff distance.

13. SECURE TRACK TO WALL

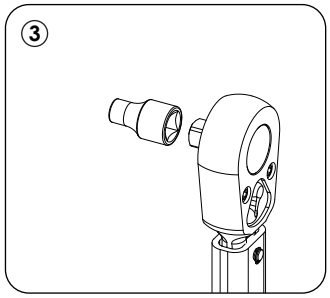

① Confirm the track has been leveled, shimmed, and all mounting points have been securely fastened.

② Inspect each track spring to ensure they are not interfering with the mounting hardware and evenly spaced along the length of the track.

③ Install 1/2" socket onto a torque wrench and torque the track bolts to 120 inch-lbs (10 ft-lbs).

④ Carefully reattach the track cover.

⑤ Confirm the track cover is fully seated and securely attached along the length.

❗ Ensure that the arrow on the inside of the track cover is facing up.

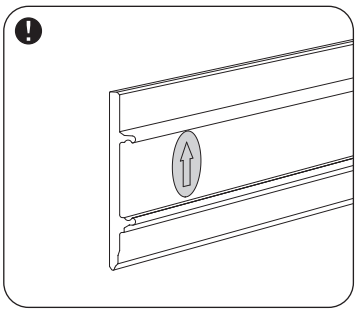

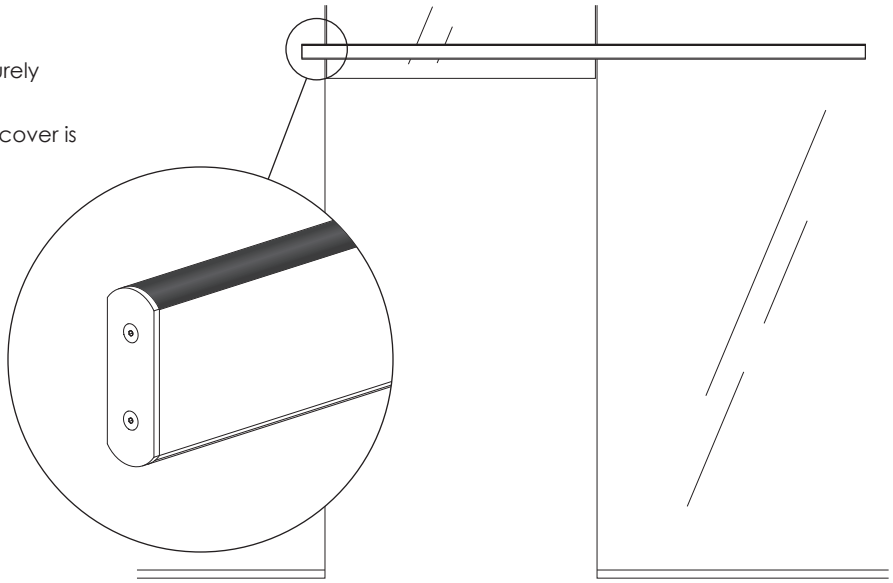

14. ATTACH DOOR STOPS

If installing Premium Door Stops, reference those installation instructions in parallel.

1. Locate the preinstalled nuts in the bottom of the track. Loosely screw a door stop to each nut.
2. Temporarily slide one door stop to each end of the track. Do not tighten the stops yet.

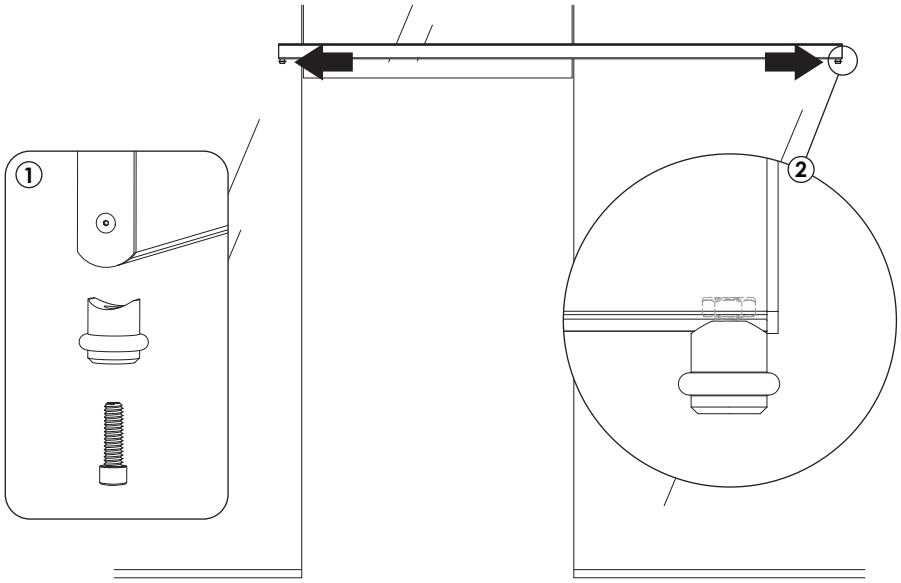

15. VERIFY DOOR PANEL SPECIFICATIONS

1. Ensure the glass door panel has the correct hole placement, hole sizing, and is prepared per Krownlab's glass panel specifications.
2. Inspect glass for any defects, e.g. chips, deformations, or irregularly shaped holes.

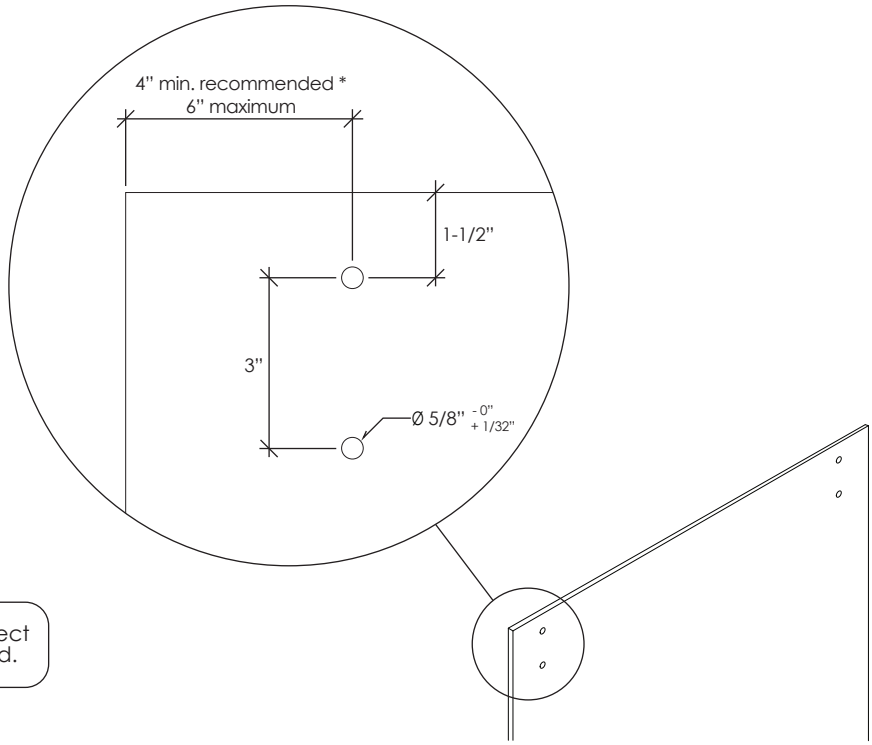

Do not use the glass with any defects!!!! Any defect is a safety hazard and the glass must be replaced.

* Facilitates easier door guide installation in step 19.

16. ATTACH TROLLEYS TO DOOR PANEL

① Attach the trolleys using the correct length fastener:

- 3/4" screws for 3/8" thick panel
- 1" screws for 1/2" thick panel

② Gently tighten, then back out each screw a half turn. This will allow you to adjust the panel height after installation.

③ Carefully hang your panel.

❗ Do not yet install your door pulls or other door hardware.

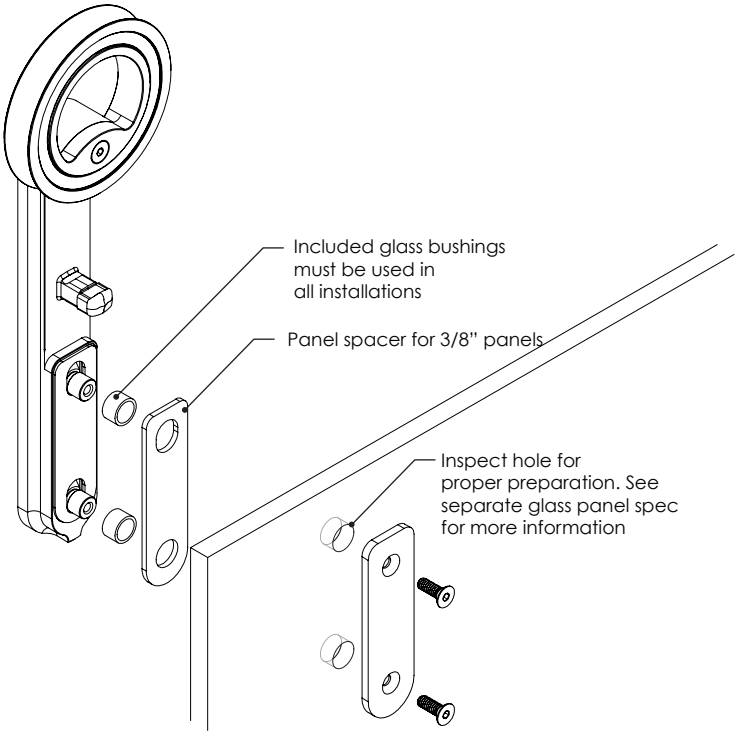

17. INSTALL SAFETY STOPS

❗ If installing Premium Door Stops, reference those installation instructions in parallel.

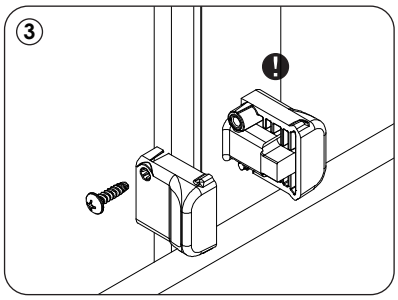

① Remove protective cap from trolley post.

② Place one safety stop on the trolley post.

❗ Ensure the safety stop is fully seated and properly aligned so this half of the post is completely covered by the safety stop.

③ Slide the second safety stop over the other side of the post.

❗ Ensure that both safety stops are aligned and fully seated.

④ Thread provided screws into both sides of the safety stops using a #2 Phillips Screw Driver and lightly tighten.

⑤ Repeat above steps for second trolley.

NOTE: Please keep the protective cap and reuse when removing and rehanging panel to prevent damage to your track.

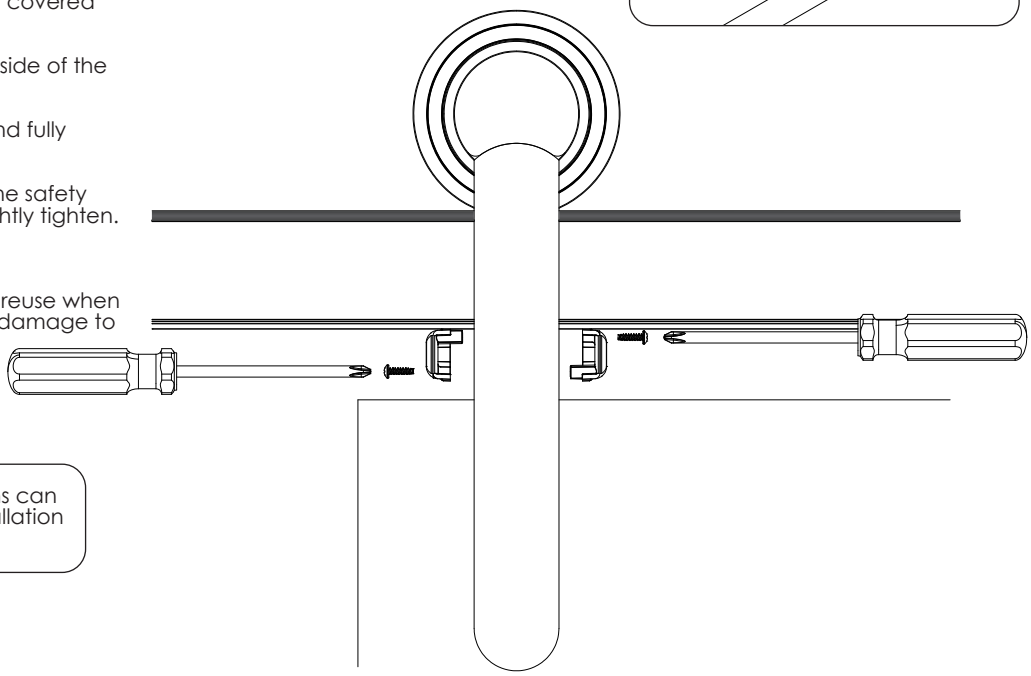

⚠ Not following the above instructions can cause a hazardous condition. Installation with both screws is mandatory.

18. ADJUST PANEL HEIGHT

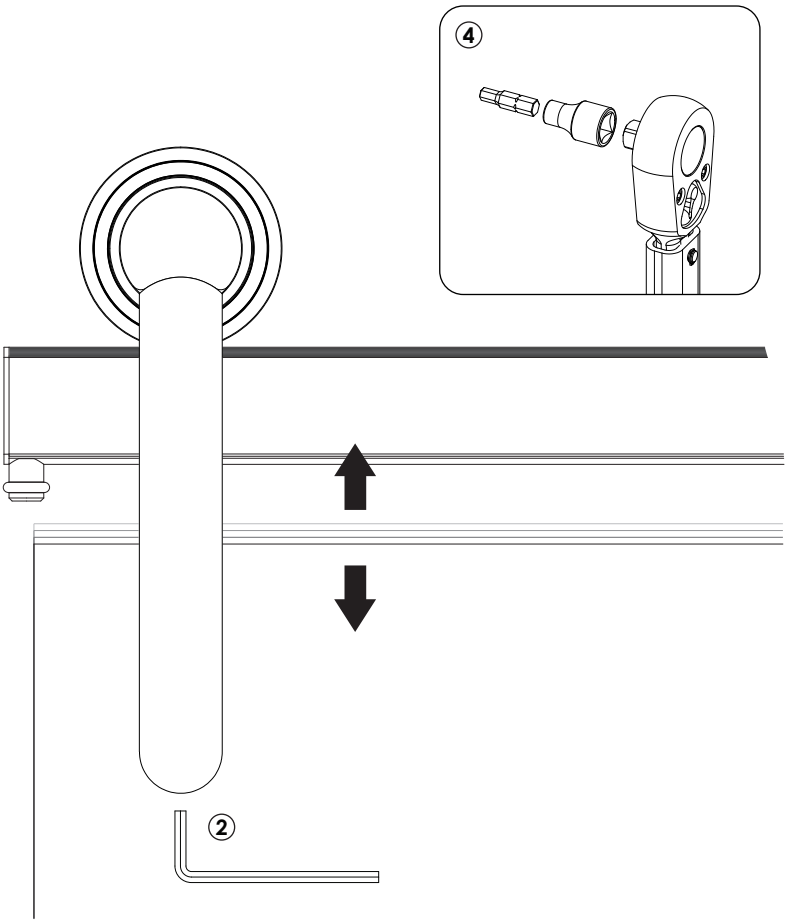

1. Check for any interference due to an uneven floor by sliding the panel back and forth.
2. If necessary, adjust the height of the panel by loosening the set screws at the bottom of each trolley with a 1/8" allen wrench. Trolleys are shipped in the up position.
3. After the panel height has been adjusted, tighten the trolley screws by hand with a 5/32" allen wrench on the backside of the panel.
4. Insert a 5/32" hex bit into a 1/4" socket on a torque wrench, and torque trolley screws to 108 inch-lbs (9 ft-lbs).

! If additional vertical adjustment is required, unhang the door panel, remove the track cover, and adjust the track up or down as needed.

19. INSTALL GLASS DOOR GUIDE

Refer to the separate installation instructions for the door guide that is included with your order. Once installed, return to this document for next steps.

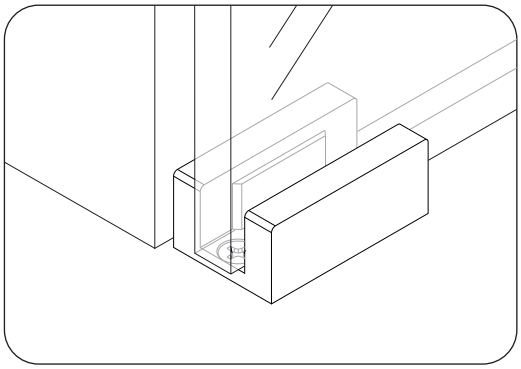

20. INSTALL DOOR PULLS

① If applicable, install door pulls following applicable installation instructions.

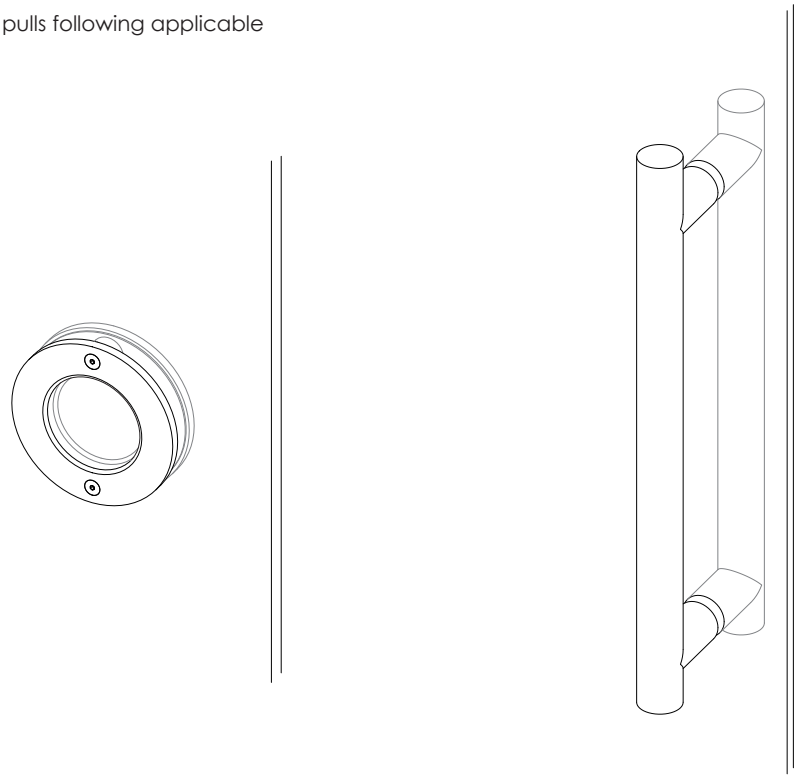

21. SET DOOR TRAVEL

❗ If installing Premium Door Stops, reference those installation instructions in parallel.

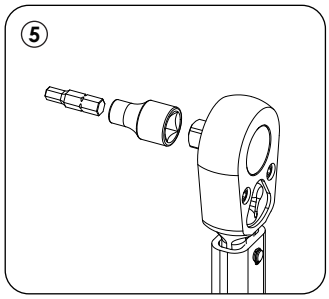

① With the door in the desired closed position, slide the door stop so that it touches the safetyy stop of the nearby trolley.

❗ Note any protruding door pulls!

② Repeat with the door in the open position, sliding the door stop so that it touches the safety stop of the nearby trolley.

❗ Verify that the door guide is properly engaged in the fully open and fully closed positions.

③ Tighten the door stops in place by hand with a 3/16" allen wrench.

④ Confirm locations haven't shifted while tightening. Adjust if needed.

⑤ Insert a 3/16" hex bit into a 1/4" socket on a torque wrench, and torque to 110 inch-lbs (9.5 ft-lbs).

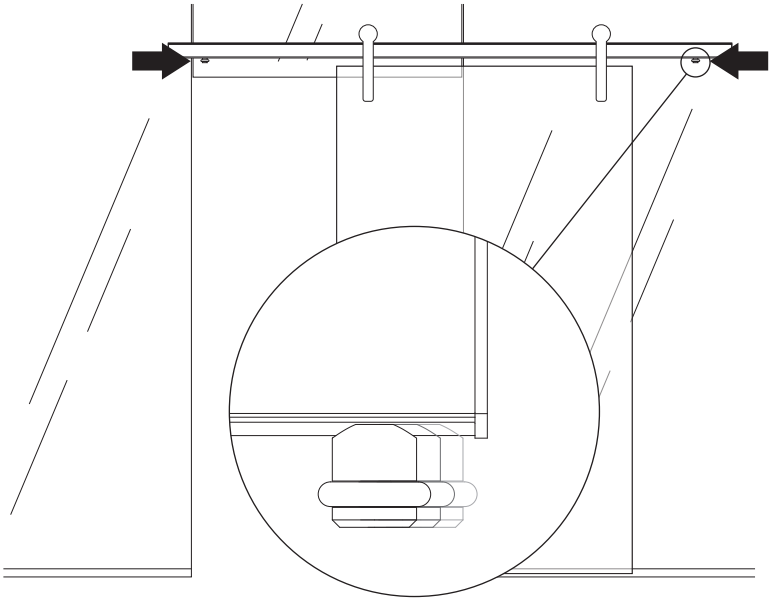

22. MAINTENANCE AND CARE

Routine Maintenance:

- Periodically check tightness of fasteners, particularly in high-use installations.
- Using a dry cloth, wipe bearing and wheel wearing surfaces and remove any build-up of dust or debris every few thousand cycles or every few months, whichever comes first.
- Bearings without seals should occasionally be lubricated with bearing oil. (e.g. SHC 630 Synthetic Gear and Bearing Oil by Exxon Mobil Corp: www.mobil.com)

Chemicals:

- This product contains elastomers, polymers, adhesives and special finishes. Chemicals must be checked for compatibility before using on product.
- Never use ammonia-based cleaners or anaerobic thread lockers on or near product.

Cleaning:

- To clean any time after installation, use a clean and dry non-abrasive lint free cloth. A mild soap may be used if extra cleaning is needed. (Remember to test an inconspicuous area prior to cleaning hardware)
- Select Black Stainless parts like the bearings can be re-enhanced with furniture style carnauba wax. If needed, apply a thin coating with a clean cloth, let dry, then buff clean. Do not apply to plastic or rubber components.
- Do not use steel wool, or a Scotch Brite pad, as it can scratch the product.

Visual product representations herein may differ from the actual products. Components and details are subject to improvement changes.

© 2018 Krownlab. All Rights Reserved. Krownlab and the Krownlab logo is registered Trademark of Krown Lab, Inc.