DOCUMENT:	PRODUCT SPECIFICATIONS	DOOR APPLICATION:	SINGLE, BI-PARTING, BYPASSING	DRAWING SCALE:	3/4" = 1'-0" (1:16)	KROWNLAB 2351 NW York St. Portland, OR 97210 +1 503 292 6998 www.krownlab.com support@krownlab.com
SYSTEM:	ODEN	PANEL THICKNESS:	1-3/8" MINIMUM	UNITS:	INCHES	
MOUNTING STYLE:	TOP MOUNT	MAXIMUM WEIGHT:	UP TO 400LBS (CONTACT US FOR HEAVIER PANELS)	DATE:	4/11/2018	

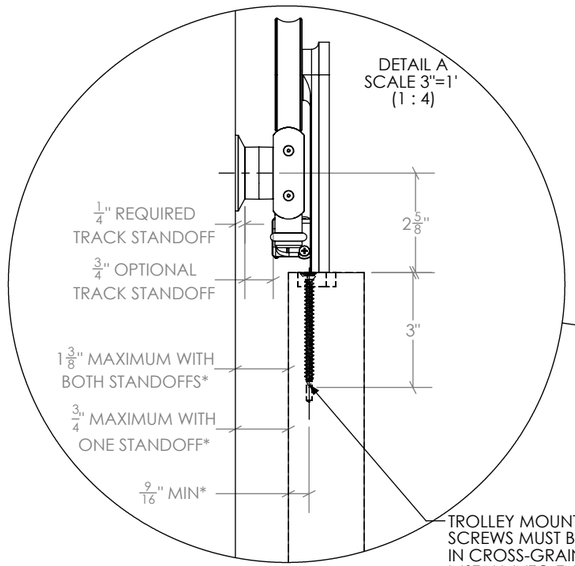

* = THESE LIMITS VARY WITH WOOD SPECIES.

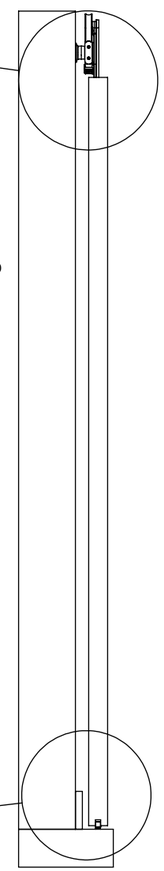

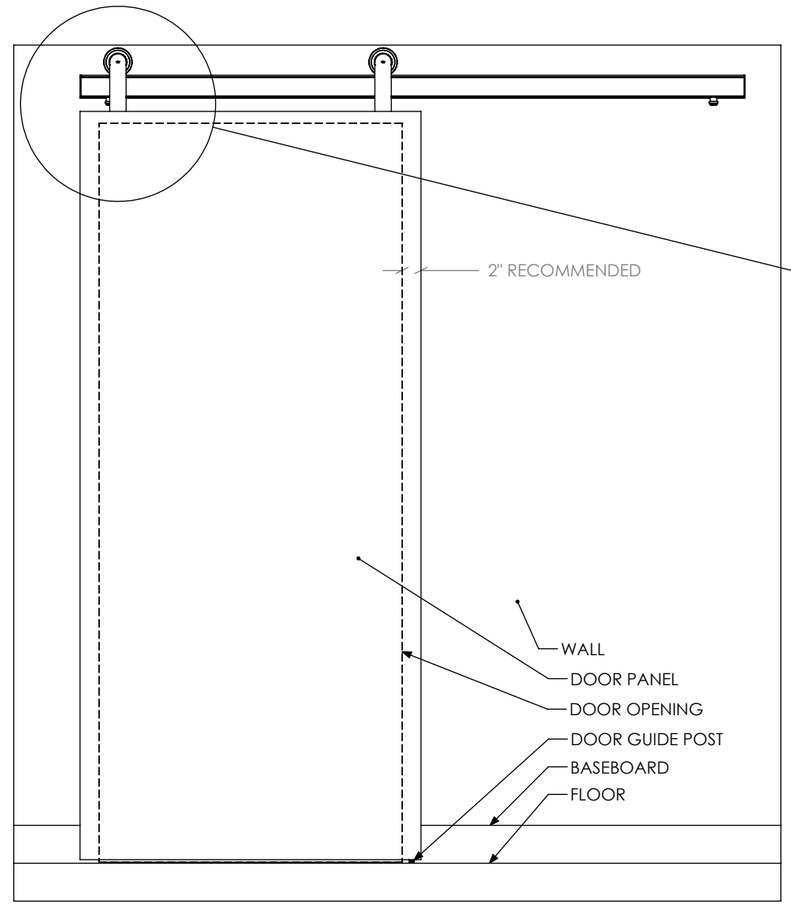

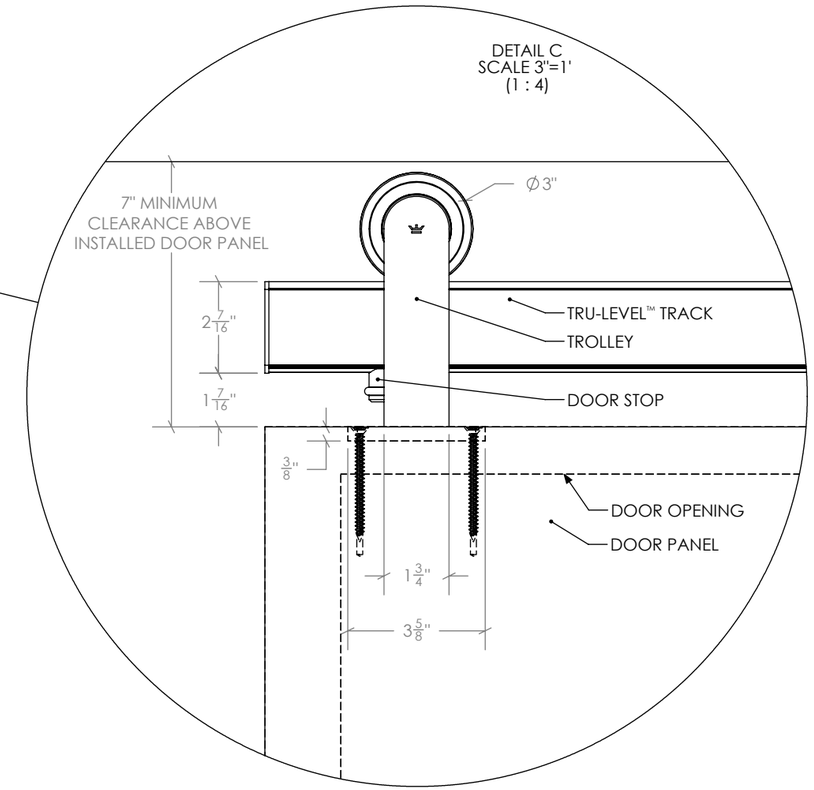

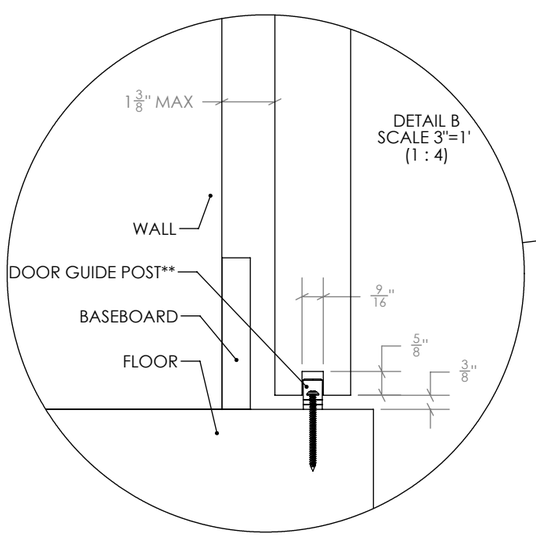

** = DOOR GUIDE MAY DIFFER

ALL INFORMATION CONTAINED IN THIS DOCUMENT IS THE PROPERTY OF KROWNLAB. ANY REPRODUCTION IN WHOLE OR IN PART IS PROHIBITED WITHOUT PRIOR WRITTEN CONSENT.
KROWNLAB AND THE KROWNLAB LOGO ARE REGISTERED TRADEMARKS OF KROWN LAB, INC.

DOCUMENT:	PRODUCT SPECIFICATIONS	DOOR APPLICATION:	SINGLE, BI-PARTING, BYPASSING	DRAWING SCALE:	3/4" = 1'-0" (1:16)	KROWNLAB 2351 NW York St. Portland, OR 97210 +1 503 292 6998 www.krownlab.com support@krownlab.com
SYSTEM:	ODEN	PANEL THICKNESS:	3/4" TO 2-1/2"* (CHOOSE TOP MOUNT FOR THICKER PANELS)	UNITS:	INCHES	
MOUNTING STYLE:	FACE MOUNT	MAXIMUM WEIGHT:	UP TO 400LBS (CONTACT US FOR HEAVIER PANELS)	DATE:	4/11/2018	

* = 2-1/2" PANEL WILL HAVE 1/8" WALL CLEARANCE.

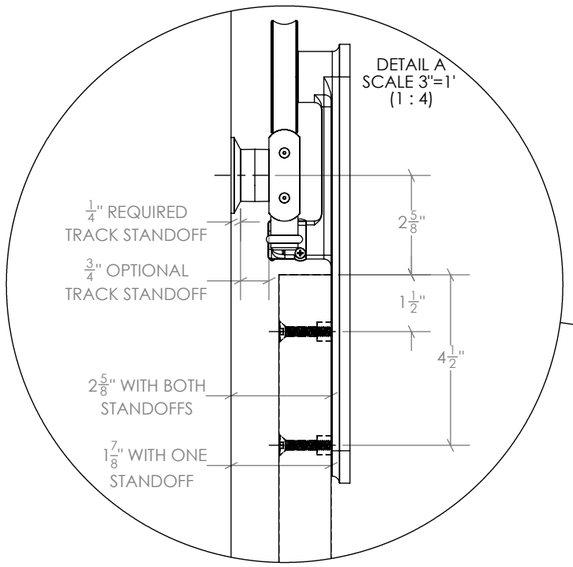

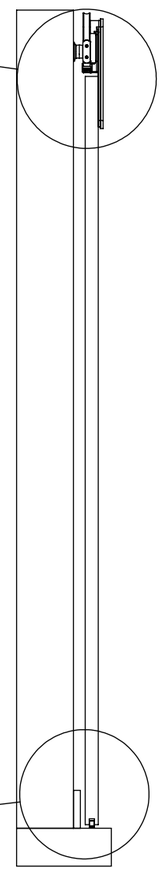

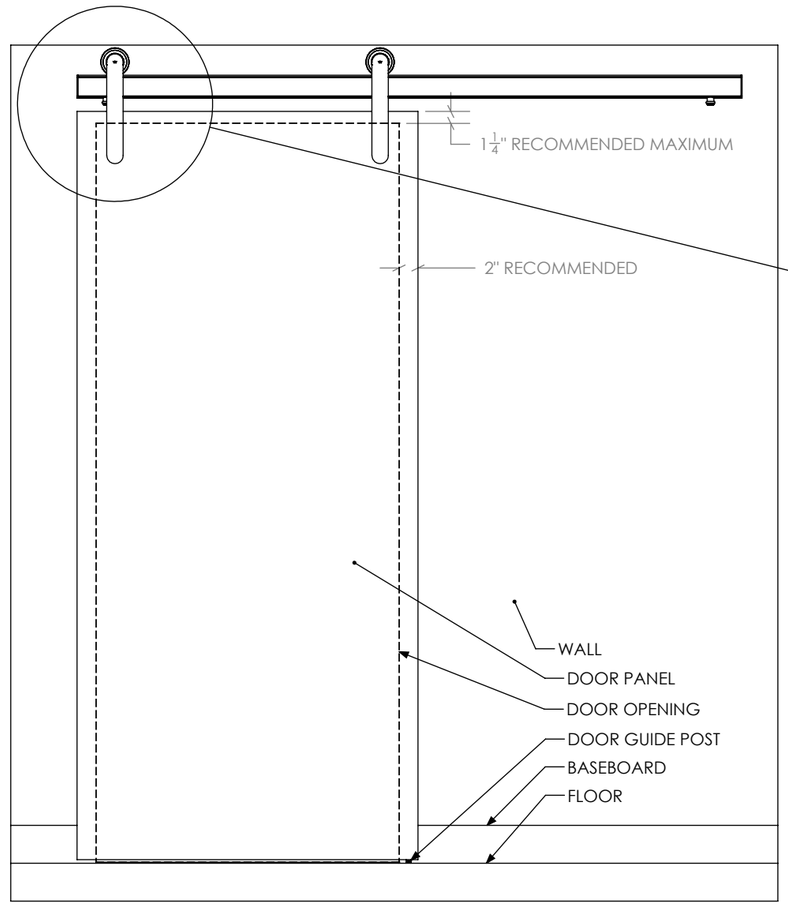

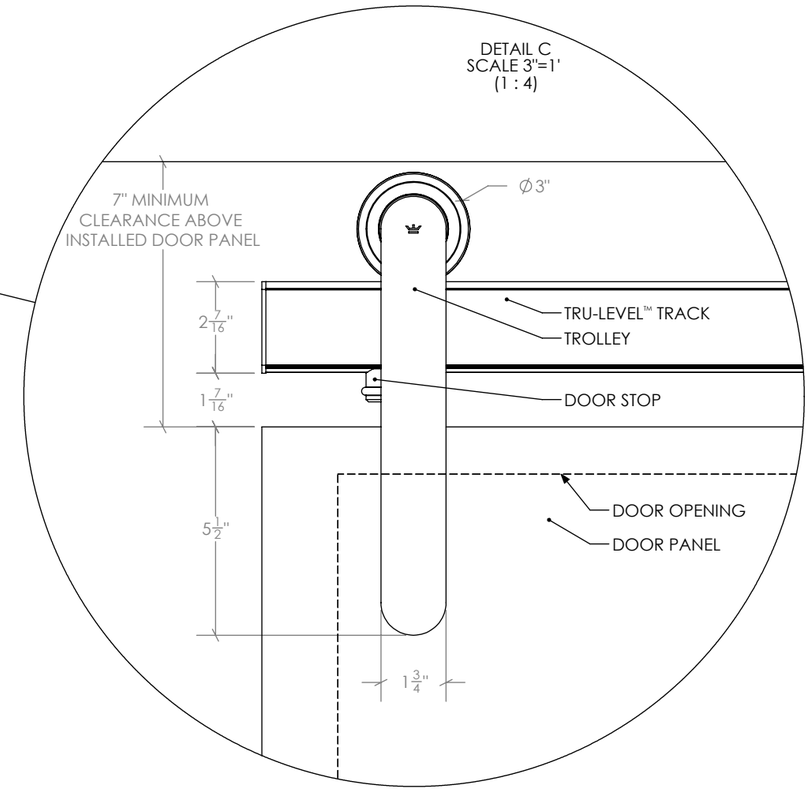

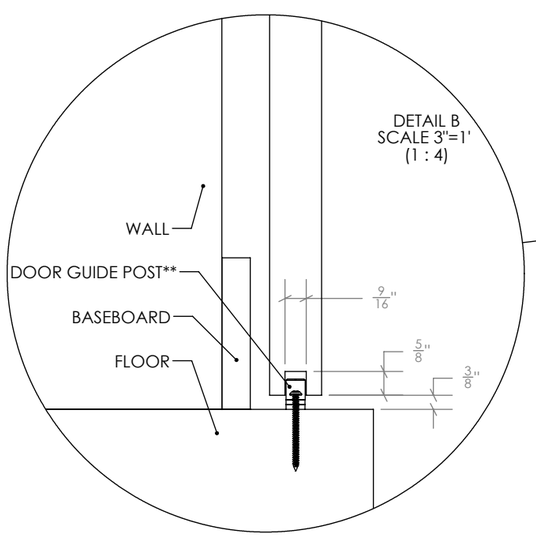

** = DOOR GUIDE MAY DIFFER

ALL INFORMATION CONTAINED IN THIS DOCUMENT IS THE PROPERTY OF KROWNLAB. ANY REPRODUCTION IN WHOLE OR IN PART IS PROHIBITED WITHOUT PRIOR WRITTEN CONSENT.
KROWNLAB AND THE KROWNLAB LOGO ARE REGISTERED TRADEMARKS OF KROWN LAB, INC.

DOCUMENT:	PRODUCT SPECIFICATIONS	DOOR APPLICATION:	SINGLE, BI-PARTING, BYPASSING	DRAWING SCALE:	3/4" = 1'-0" (1:16)	KROWNLAB 2351 NW York St. Portland, OR 97210 +1 503 292 6998 www.krownlab.com support@krownlab.com
SYSTEM:	ODEN	PANEL THICKNESS:	3/8" TO 1/2" (CONTACT US FOR PANELS OUTSIDE OF THIS RANGE)	UNITS:	INCHES	
MOUNTING STYLE:	GLASS MOUNT	MAXIMUM WEIGHT:	UP TO 400LBS (CONTACT US FOR HEAVIER PANELS)	DATE:	4/11/2018	

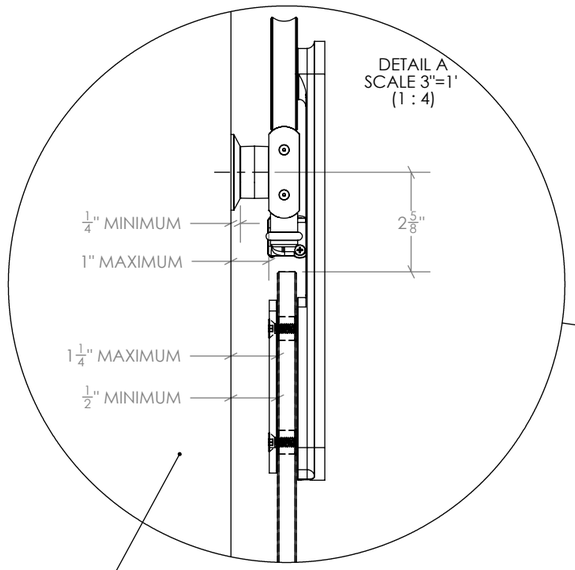

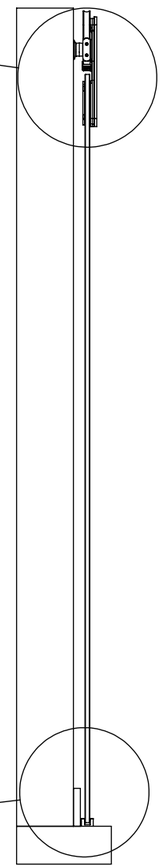

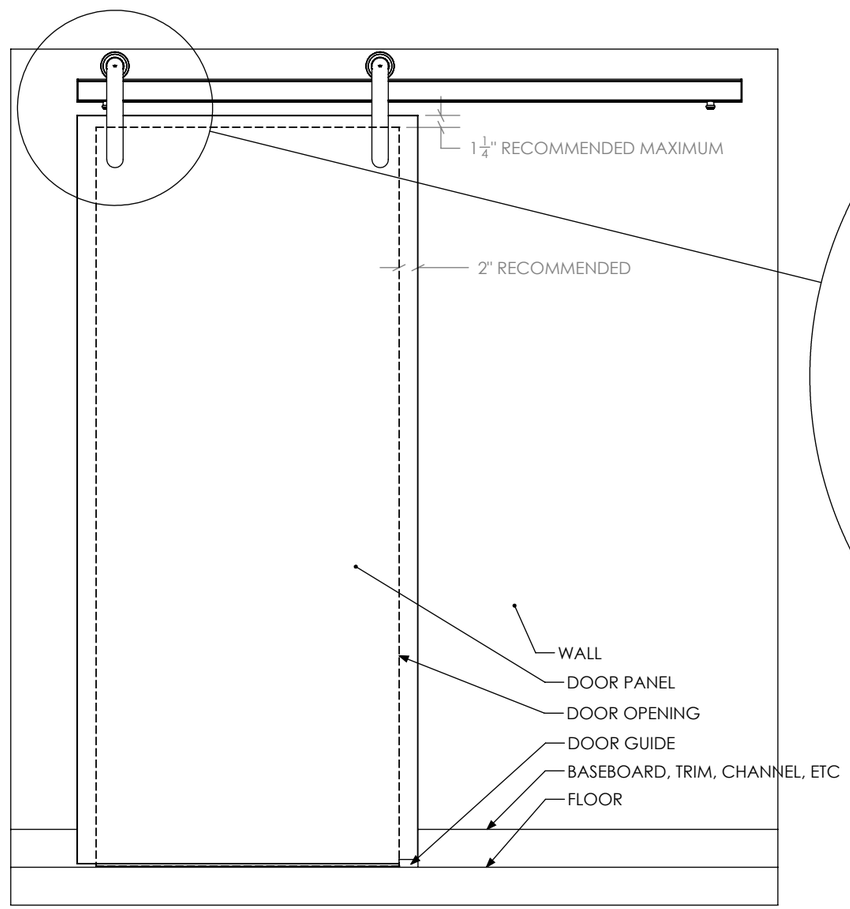

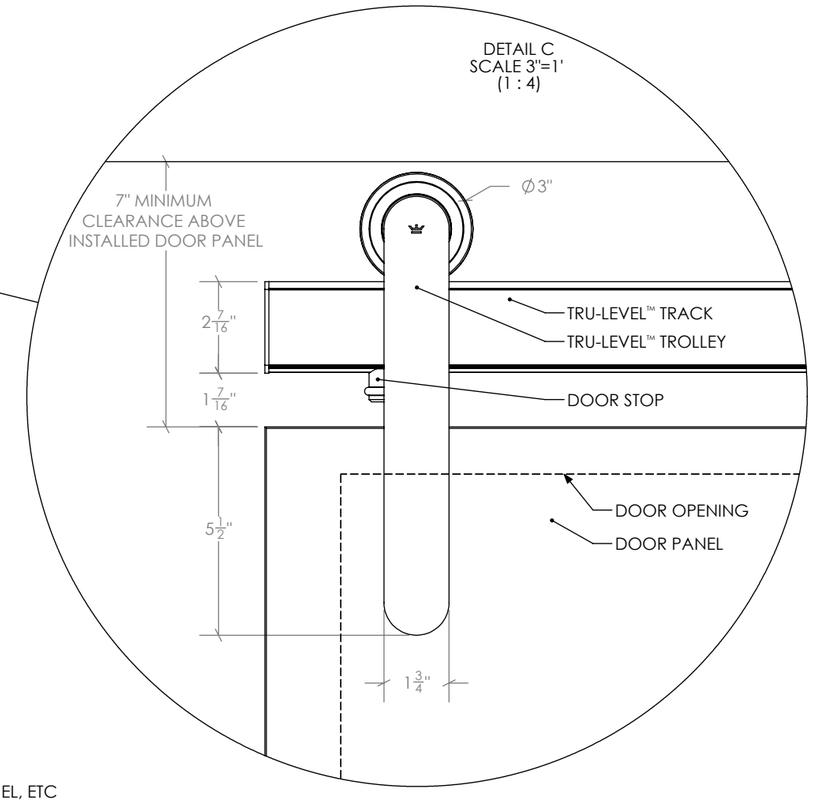

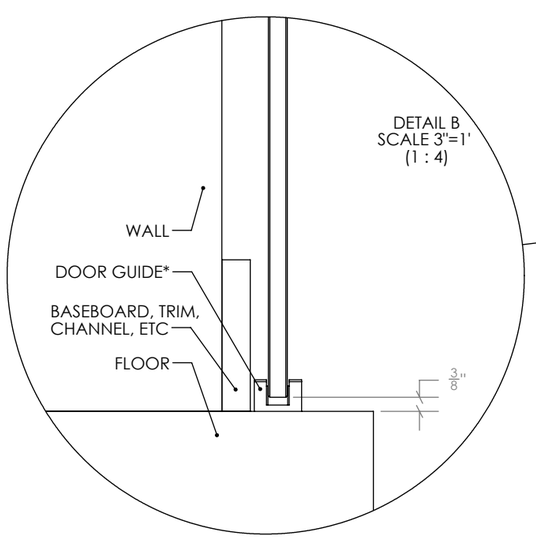

* = DOOR GUIDE MAY DIFFER

ALL INFORMATION CONTAINED IN THIS DOCUMENT IS THE PROPERTY OF KROWNLAB. ANY REPRODUCTION IN WHOLE OR IN PART IS PROHIBITED WITHOUT PRIOR WRITTEN CONSENT.
KROWNLAB AND THE KROWNLAB LOGO ARE REGISTERED TRADEMARKS OF KROWN LAB, INC.

DOCUMENT:	PRODUCT SPECIFICATIONS	DOOR APPLICATION:	SINGLE, BI-PARTING, BYPASSING	DRAWING SCALE:	4" = 1'-0" (1:3)	KROWNLAB 2351 NW York St. Portland, OR 97210 +1 503 292 6998 www.krownlab.com support@krownlab.com
SYSTEM:	ODEN	PANEL THICKNESS:	1-3/8" MINIMUM	UNITS:	INCHES	
MOUNTING STYLE:	TOP MOUNT	MAXIMUM WEIGHT:	UP TO 400LBS (CONTACT US FOR HEAVIER PANELS)	DATE:	4/11/2018	

WHAT'S INCLUDED:
2 x - #A204 - ODEN TOP MOUNT TROLLEY KIT
1 x - #A020 - DOOR GUIDE POST KIT (DOOR GUIDE MAY DIFFER - MULTIPLE OPTIONS EXIST)
1 x - #Txxxx - TRU-LEVEL™ TRACK SYSTEM WITH ALL MOUNTING HARDWARE (SEE SEPARATE PAGE)

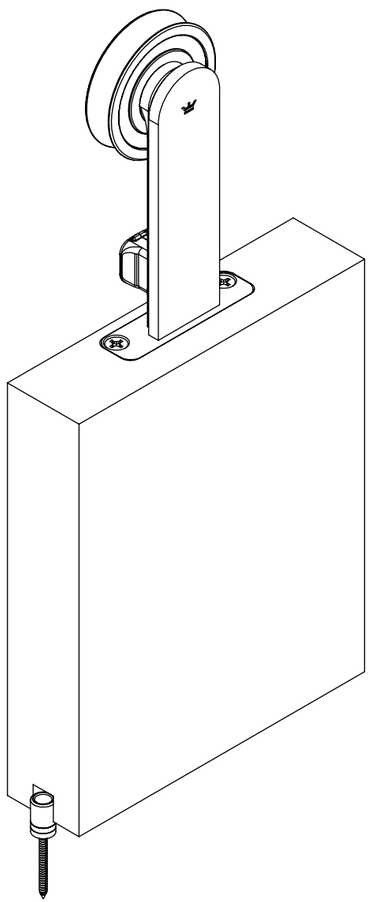

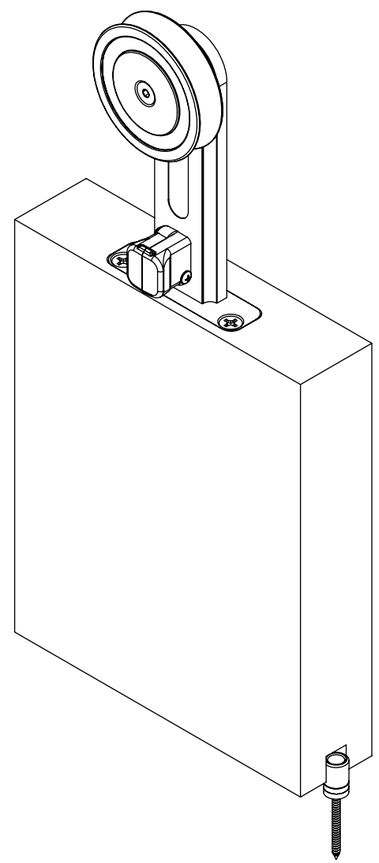

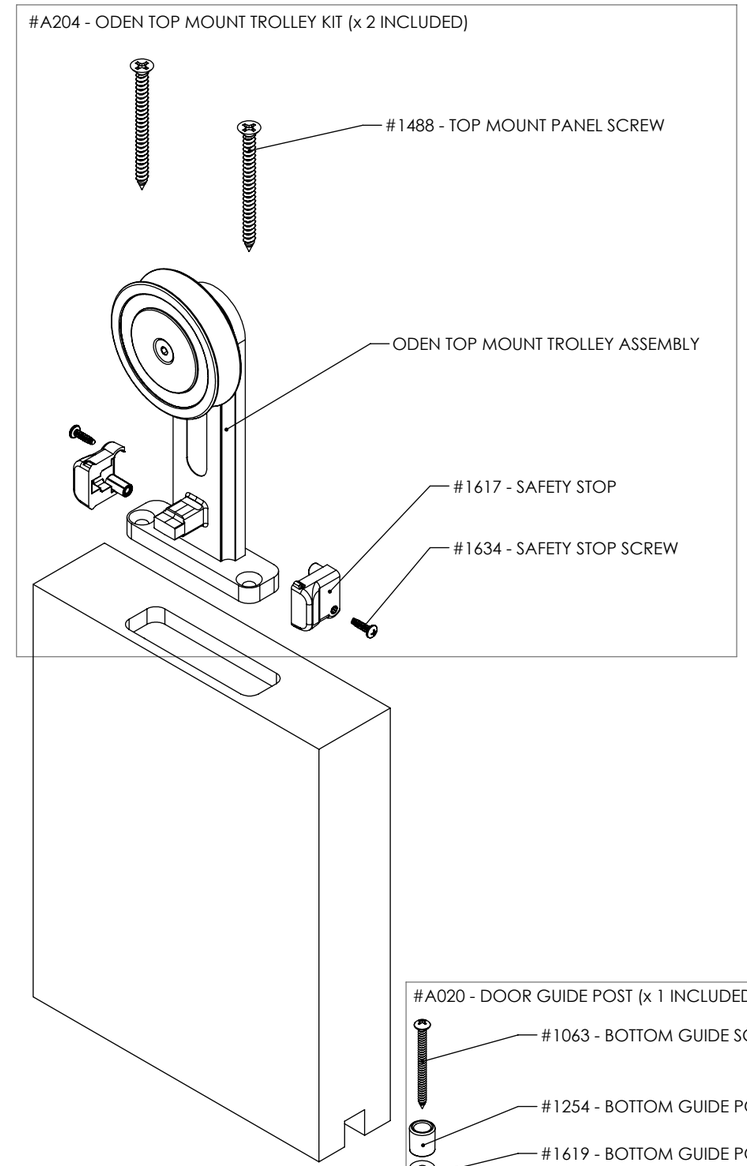

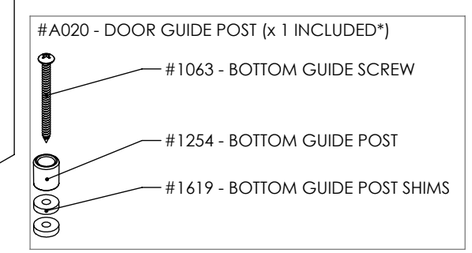

* = THE DOOR GUIDE MAY DIFFER - MULTIPLE OPTIONS EXIST

ALL INFORMATION CONTAINED IN THIS DOCUMENT IS THE PROPERTY OF KROWNLAB. ANY REPRODUCTION IN WHOLE OR IN PART IS PROHIBITED WITHOUT PRIOR WRITTEN CONSENT.
KROWNLAB AND THE KROWNLAB LOGO ARE REGISTERED TRADEMARKS OF KROWN LAB, INC.

DOCUMENT:	PRODUCT SPECIFICATIONS	DOOR APPLICATION:	SINGLE, BI-PARTING, BYPASSING	DRAWING SCALE:	4" = 1'-0" (1:3)	KROWNLAB 2351 NW York St. Portland, OR 97210 +1 503 292 6998 www.krownlab.com support@krownlab.com
SYSTEM:	ODEN	PANEL THICKNESS:	3/4" TO 2-1/2"* (CHOOSE TOP MOUNT FOR THICKER PANELS)	UNITS:	INCHES	
MOUNTING STYLE:	FACE MOUNT	MAXIMUM WEIGHT:	UP TO 400LBS (CONTACT US FOR HEAVIER PANELS)	DATE:	4/11/2018	

* = 2-1/2" PANEL WILL HAVE 1/8" WALL CLEARANCE.

WHAT'S INCLUDED:
2 x - #A205 - ODEN FACE MOUNT TROLLEY KIT
1 x - #A020 - DOOR GUIDE POST KIT (DOOR GUIDE MAY DIFFER - MULTIPLE OPTIONS EXIST)
1 x - #Txxxx - TRU-LEVEL™ TRACK SYSTEM WITH ALL MOUNTING HARDWARE (SEE SEPARATE PAGE)

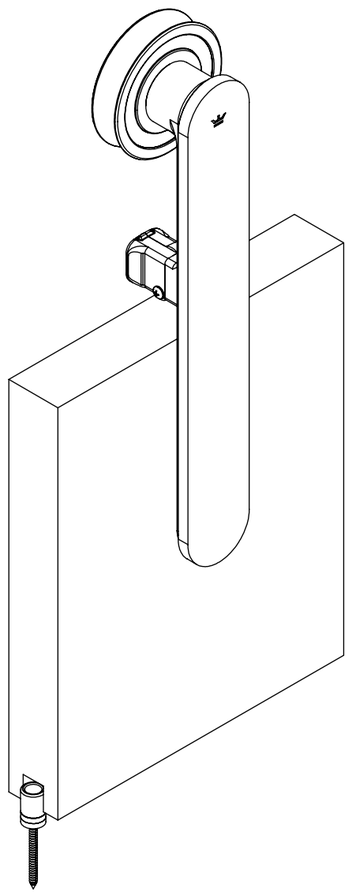

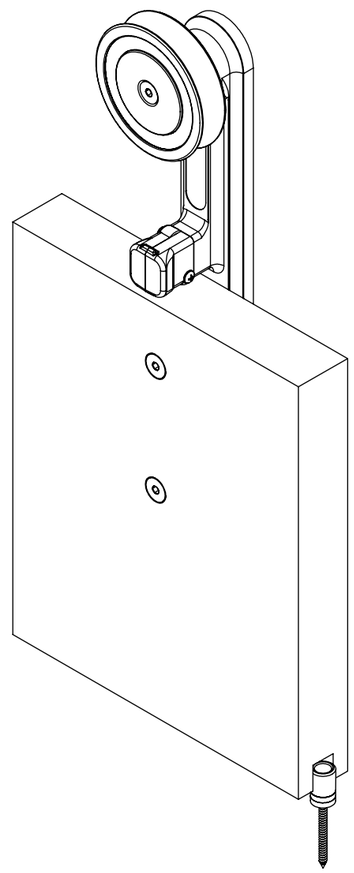

#A205 - ODEN FACE MOUNT TROLLEY KIT (x 2 INCLUDED)

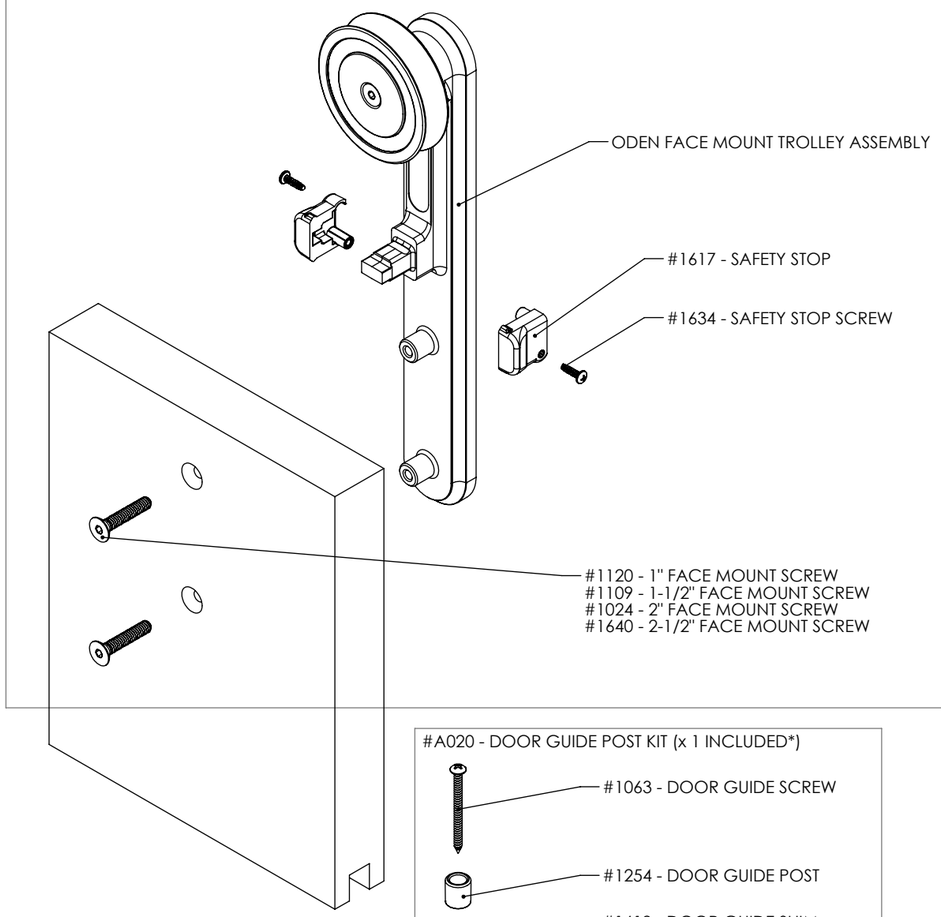

#A020 - DOOR GUIDE POST KIT (x 1 INCLUDED*)

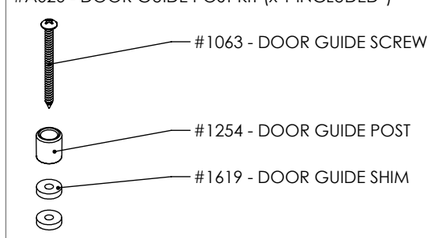

* = THE DOOR GUIDE MAY DIFFER - MULTIPLE OPTIONS EXIST

ALL INFORMATION CONTAINED IN THIS DOCUMENT IS THE PROPERTY OF KROWNLAB. ANY REPRODUCTION IN WHOLE OR IN PART IS PROHIBITED WITHOUT PRIOR WRITTEN CONSENT.
KROWNLAB AND THE KROWNLAB LOGO ARE REGISTERED TRADEMARKS OF KROWN LAB, INC.

DOCUMENT:	PRODUCT SPECIFICATIONS	DOOR APPLICATION:	SINGLE, BI-PARTING, BYPASSING	DRAWING SCALE:	4" = 1'-0" (1:3)	KROWNLAB 2351 NW York St. Portland, OR 97210 +1 503 292 6998 www.krownlab.com support@krownlab.com
SYSTEM:	ODEN	PANEL THICKNESS:	3/8" TO 1/2" (CONTACT US FOR PANELS OUTSIDE OF THIS RANGE)	UNITS:	INCHES	
MOUNTING STYLE:	GLASS MOUNT	MAXIMUM WEIGHT:	UP TO 400LBS (CONTACT US FOR HEAVIER PANELS)	DATE:	4/11/2018	

WHAT'S INCLUDED:
2 x - #A206 - ODEN GLASS MOUNT TROLLEY KIT
1 x - #A219 - DOOR GUIDE KIT (DOOR GUIDE MAY DIFFER - MULTIPLE OPTIONS EXIST)
1 x - #Txxxx - TRU-LEVEL™ TRACK SYSTEM WITH ALL MOUNTING HARDWARE (SEE SEPARATE PAGE)

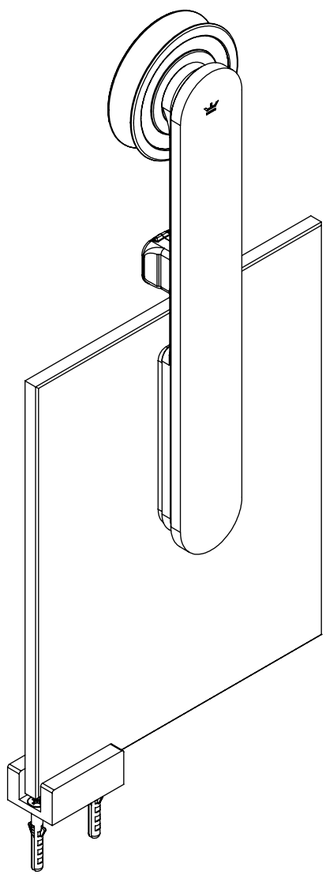

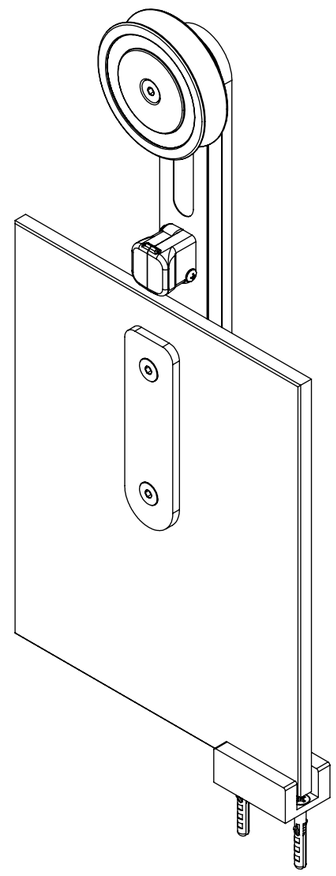

#A206 - ODEN GLASS MOUNT TROLLEY KIT (x 2 INCLUDED)

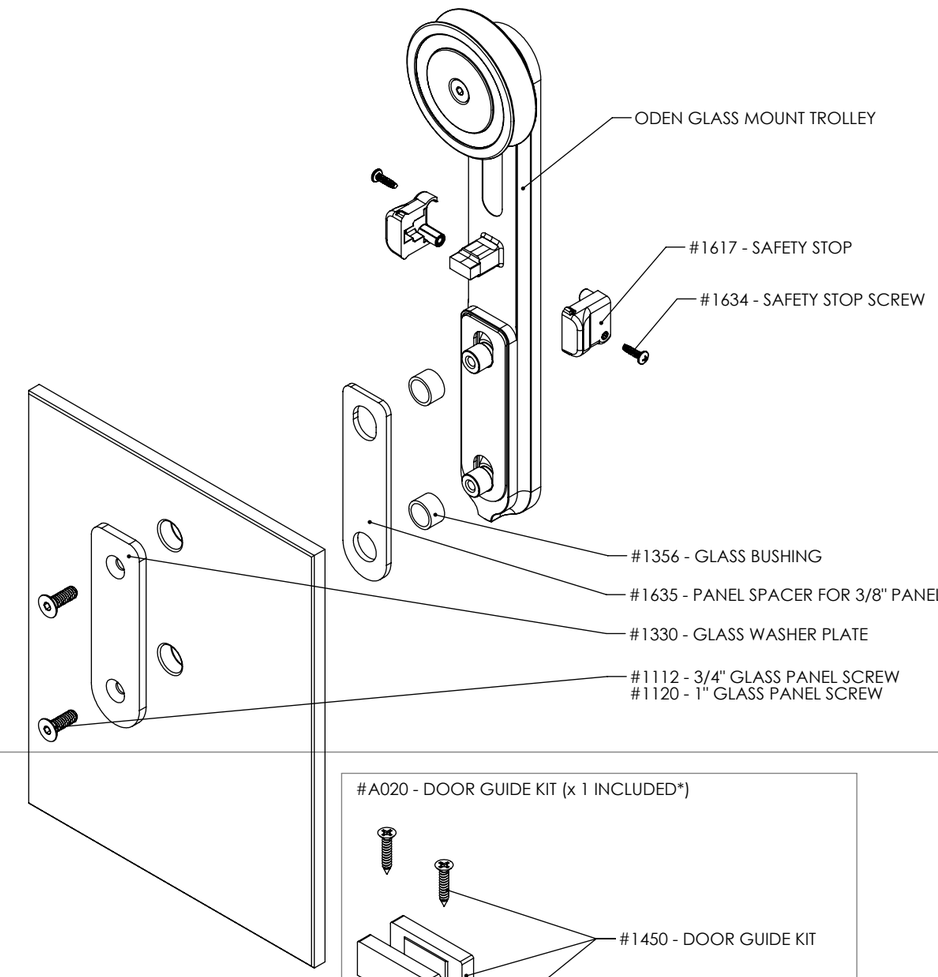

#A020 - DOOR GUIDE KIT (x 1 INCLUDED*)

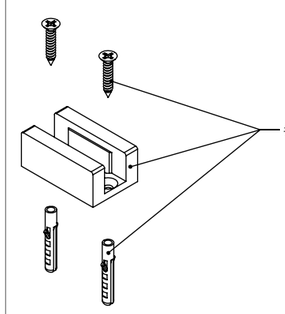

* = THE DOOR GUIDE MAY DIFFER - MULTIPLE OPTIONS EXIST

ALL INFORMATION CONTAINED IN THIS DOCUMENT IS THE PROPERTY OF KROWNLAB. ANY REPRODUCTION IN WHOLE OR IN PART IS PROHIBITED WITHOUT PRIOR WRITTEN CONSENT.
KROWNLAB AND THE KROWNLAB LOGO ARE REGISTERED TRADEMARKS OF KROWN LAB, INC.

DOCUMENT:	PRODUCT SPECIFICATIONS - DOOR CONFIGURATIONS	DOOR APPLICATION:	SINGLE, BI-PARTING, BYPASSING	DRAWING SCALE:	3/8" = 1'-0" (1:32)	KROWNLAB 2351 NW York St. Portland, OR 97210 +1 503 292 6998 www.krownlab.com support@krownlab.com
SYSTEM:	TRU-LEVEL™ TRACK	PANEL THICKNESS:	TROLLEY SYSTEM OR TRACK CONFIGURATION DEPENDENT	UNITS:	INCHES	
MOUNTING STYLE:	FRAMED WALL	MAXIMUM WEIGHT:	TROLLEY SYSTEM OR TRACK CONFIGURATION DEPENDENT	DATE:	3/12/2018	

SINGLE

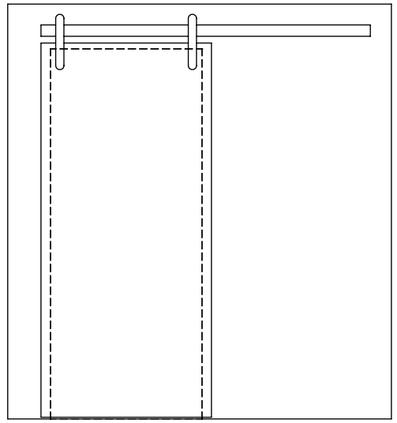

BI-PARTING

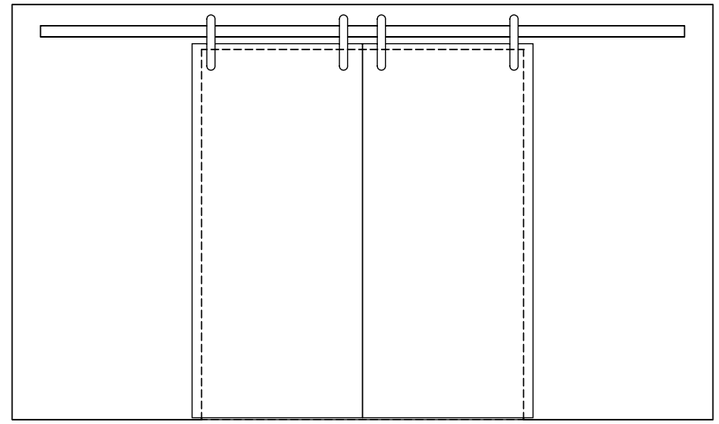

BYPASSING

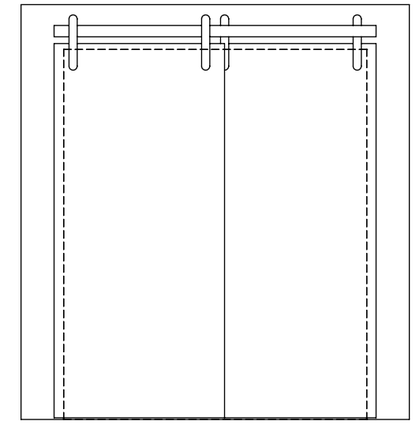

BI-PARTING-BYPASSING

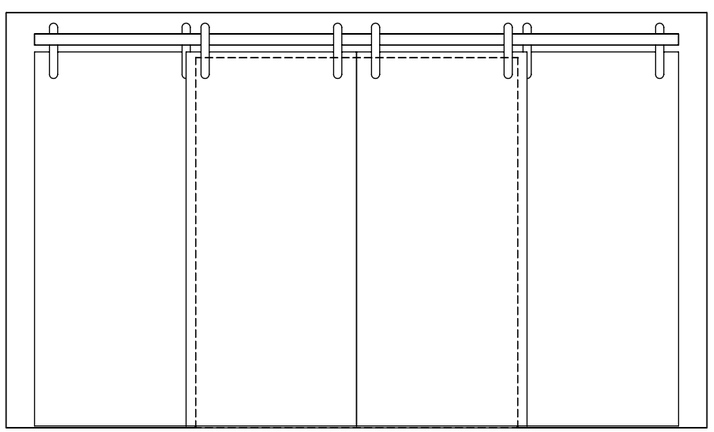

BYPASSING STACKED

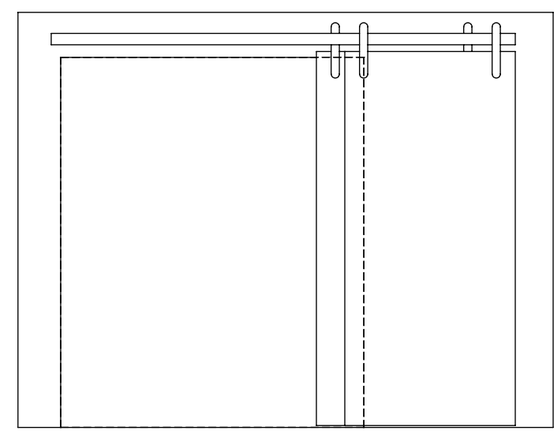

ALL INFORMATION CONTAINED IN THIS DOCUMENT IS THE PROPERTY OF KROWNLAB. ANY REPRODUCTION IN WHOLE OR IN PART IS PROHIBITED WITHOUT PRIOR WRITTEN CONSENT.
KROWNLAB AND THE KROWNLAB LOGO ARE REGISTERED TRADEMARKS OF KROWN LAB, INC.

DOCUMENT:	PRODUCT SPECIFICATIONS	DOOR APPLICATION:	SINGLE, BI-PARTING, BYPASSING	DRAWING SCALE:	6" = 1'-0" (1:2)	KROWNLAB 2351 NW York St. Portland, OR 97210 +1 503 292 6998 www.krownlab.com support@krownlab.com
SYSTEM:	TRU-LEVEL™ TRACK	PANEL THICKNESS:	TROLLEY SYSTEM DEPENDENT	UNITS:	INCHES	
MOUNTING STYLE:	FRAMED WALL	MAXIMUM WEIGHT:	TROLLEY SYSTEM DEPENDENT	DATE:	3/12/2018	

WHAT'S INCLUDED:
1 x - #Txxxx - TRU-LEVEL™ TRACK SYSTEM WITH ALL MOUNTING HARDWARE:
X x - #A252 - STANDARD TRACK MOUNTING KIT
2 x - #A214 - DOOR STOP KIT
X x - #A213 - TRACK CONNECTOR KIT (1 x PER TRACK JOINT INLCUDED)

#A214 - DOOR STOP KIT (x 2 INCLUDED*)

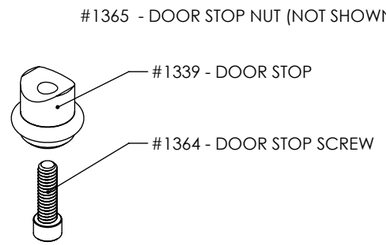

* = THE DOOR STOP MAY DIFFER - MULTIPLE OPTIONS EXIST
VISIT WWW.KROWNLAB.COM FOR ALL OPTIONS

#A217 - TRACK SHIM KIT (NOT INCLUDED)

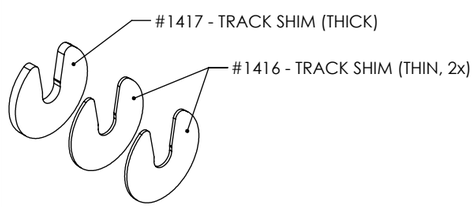

TRACK SHIMS ARE DESIGNED TO BE INSTALLED AGAINST TRACK

#A213 - TRACK CONNECTOR KIT
(1 x PER TRACK JOINT INLCUDED)

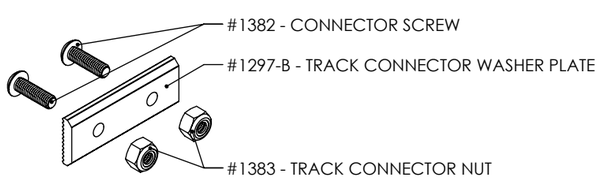

#Txxxx - TRU-LEVEL™ TRACK SYSTEM

#A252 - TRACK MOUNT KIT (QUANTITY MATCHES THE STANDARD KROWNLAB TRACK DRILL PATTERN)

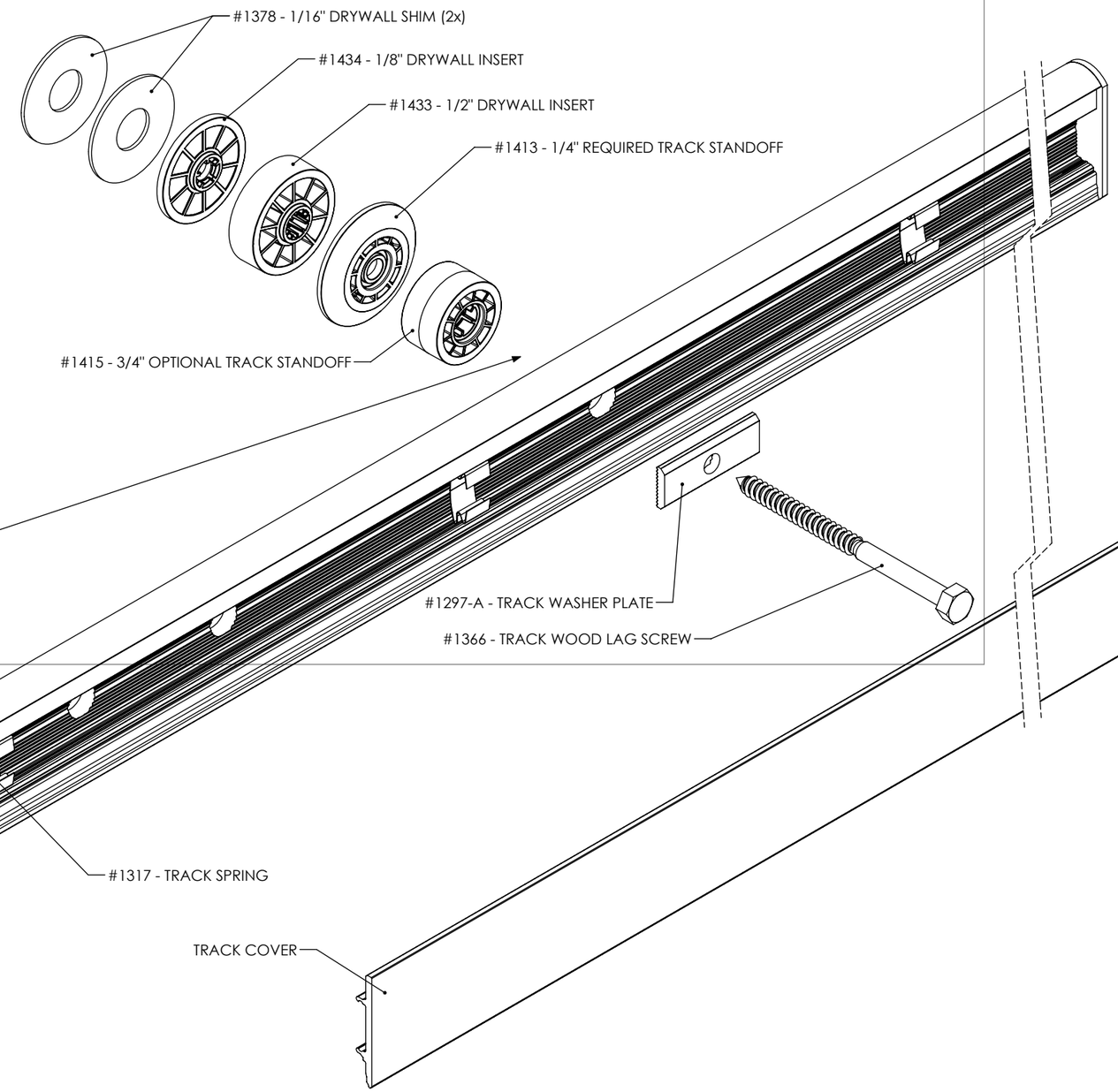

ALL INFORMATION CONTAINED IN THIS DOCUMENT IS THE PROPERTY OF KROWNLAB. ANY REPRODUCTION IN WHOLE OR IN PART IS PROHIBITED WITHOUT PRIOR WRITTEN CONSENT.
KROWNLAB AND THE KROWNLAB LOGO ARE REGISTERED TRADEMARKS OF KROWN LAB, INC.

DOCUMENT:	PRODUCT SPECIFICATIONS - STANDARD TRACK MOUNTING POINT	DOOR APPLICATION:	SINGLE, BI-PARTING, BYPASSING	DRAWING SCALE:	6" = 1'-0" (1:2)	KROWNLAB 2351 NW York St. Portland, OR 97210 +1 503 292 6998 www.krownlab.com support@krownlab.com
SYSTEM:	TRU-LEVEL™ TRACK	PANEL THICKNESS:	TROLLEY SYSTEM DEPENDENT	UNITS:	INCHES	
MOUNTING STYLE:	FRAMED WALL	MAXIMUM WEIGHT:	TROLLEY SYSTEM DEPENDENT	DATE:	3/12/2018	

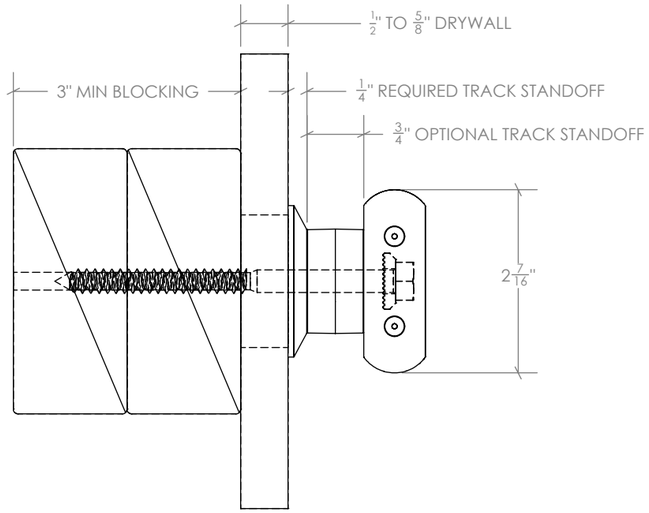

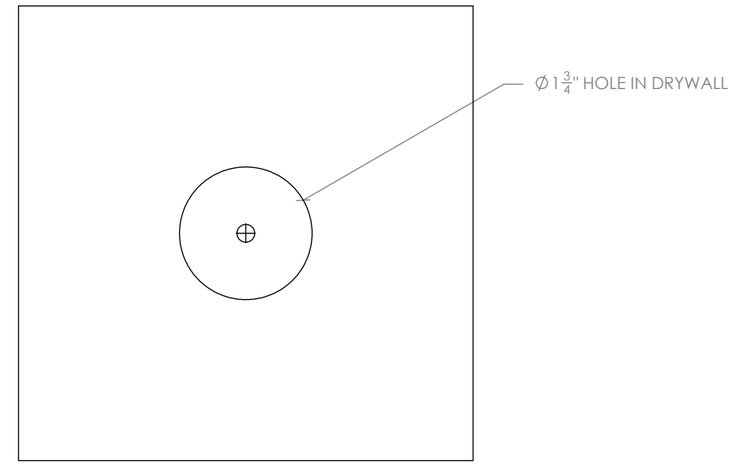

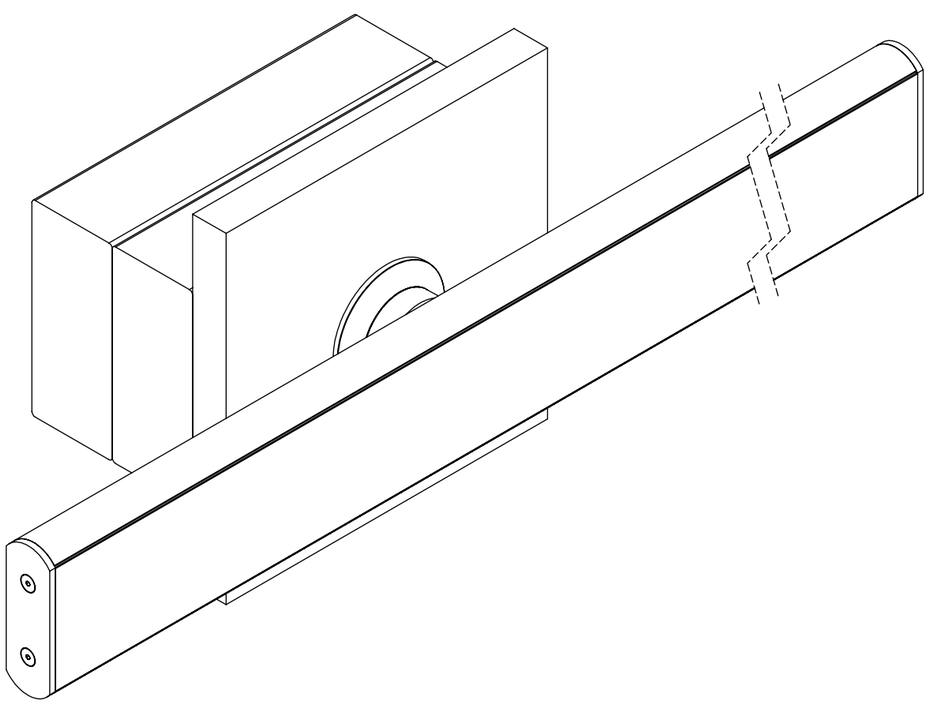

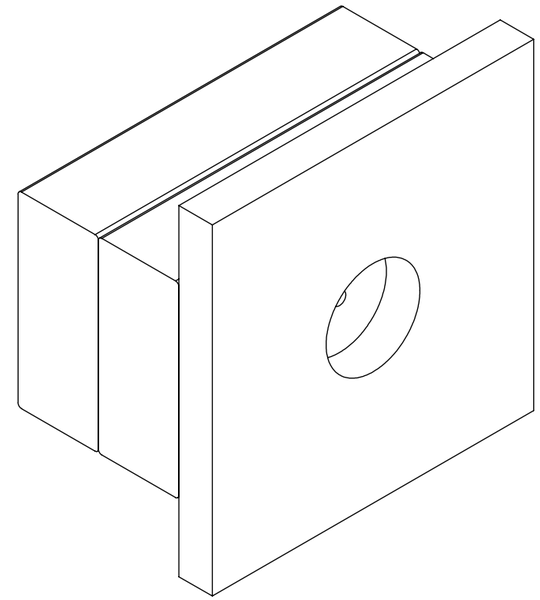

ALL INFORMATION CONTAINED IN THIS DOCUMENT IS THE PROPERTY OF KROWNLAB. ANY REPRODUCTION IN WHOLE OR IN PART IS PROHIBITED WITHOUT PRIOR WRITTEN CONSENT.
KROWNLAB AND THE KROWNLAB LOGO ARE REGISTERED TRADEMARKS OF KROWN LAB, INC.

DOCUMENT:	PRODUCT SPECIFICATIONS - TRACK CONNECTOR	DOOR APPLICATION:	SINGLE & BI-PARTING	DRAWING SCALE:	6" = 1'-0" (1:2)	KROWNLAB 2351 NW York St. Portland, OR 97210 +1 503 292 6998 www.krownlab.com support@krownlab.com
SYSTEM:	TRU-LEVEL™ TRACK	PANEL THICKNESS:	TROLLEY SYSTEM DEPENDENT	UNITS:	INCHES	
MOUNTING STYLE:	ALL WALL TYPES	MAXIMUM WEIGHT:	TROLLEY SYSTEM DEPENDENT	DATE:	3/12/2018	

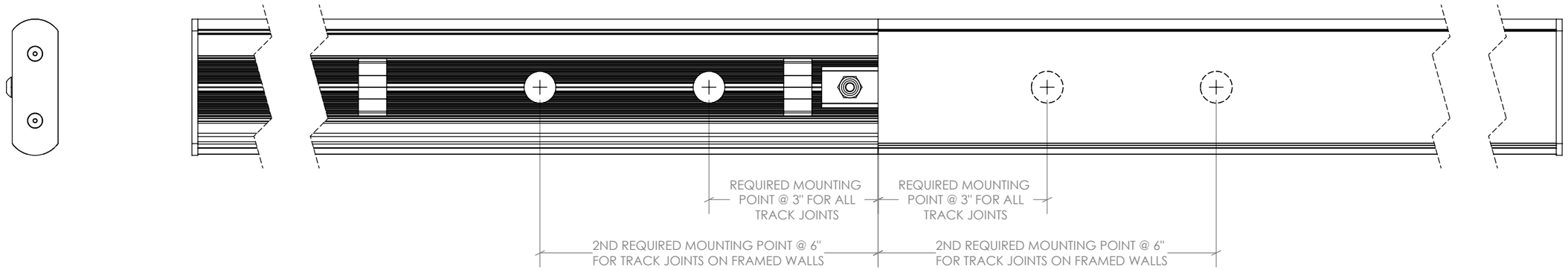

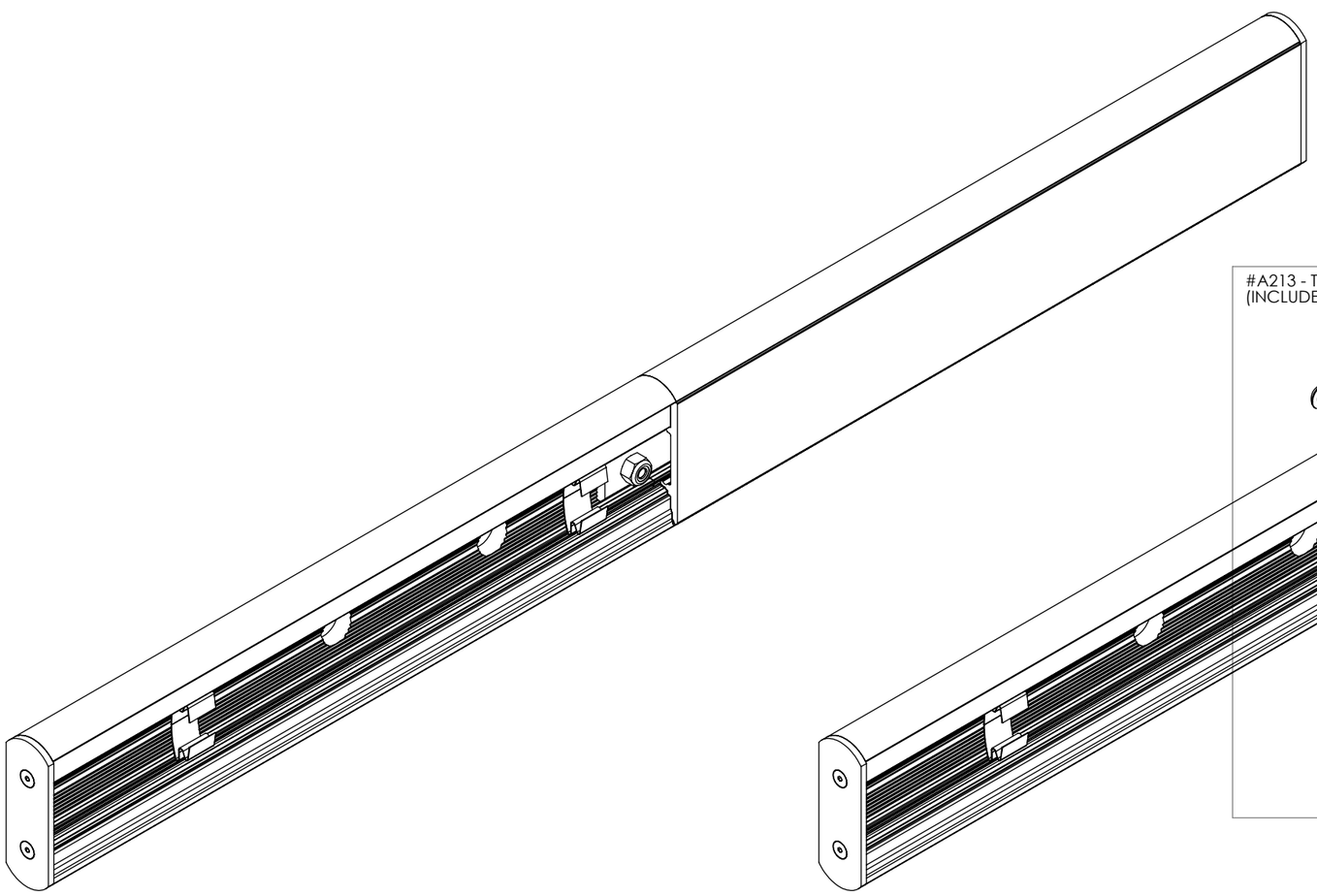

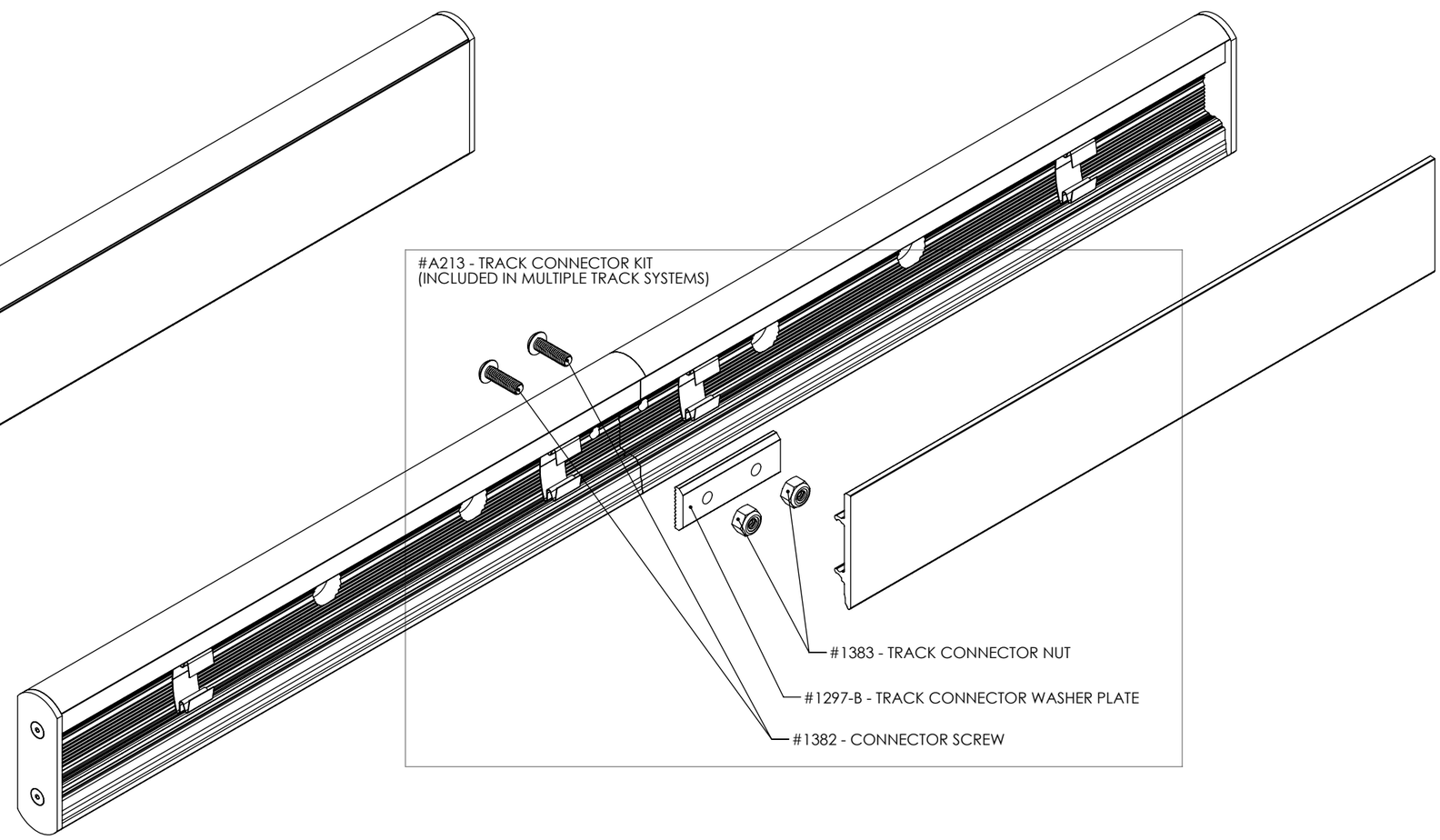

ALL INFORMATION CONTAINED IN THIS DOCUMENT IS THE PROPERTY OF KROWNLAB. ANY REPRODUCTION IN WHOLE OR IN PART IS PROHIBITED WITHOUT PRIOR WRITTEN CONSENT.
KROWNLAB AND THE KROWNLAB LOGO ARE REGISTERED TRADEMARKS OF KROWN LAB, INC.

DOCUMENT:	PRODUCT SPECIFICATIONS - PERPENDICULAR TRACK MOUNTING POINT	DOOR APPLICATION:	SINGLE, BI-PARTING, BYPASSING	DRAWING SCALE:	3/4" = 1'-0" (1:16)	KROWNLAB 2351 NW York St. Portland, OR 97210 +1 503 292 6998 www.krownlab.com support@krownlab.com
SYSTEM:	TRU-LEVEL™ TRACK	PANEL THICKNESS:	TROLLEY SYSTEM DEPENDENT	UNITS:	INCHES	
MOUNTING STYLE:	FRAMED WALL	MAXIMUM WEIGHT:	TROLLEY SYSTEM OR TRACK CONFIGURATION DEPENDENT	DATE:	3/12/2018	

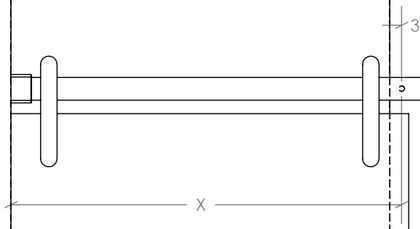

INSTALLED INTO STRUCTURAL BLOCKING (OPTIMAL)

SPAN (X)	MAX. PANEL WEIGHT
UP TO 38"	300lb
UP TO 44"	275lb
UP TO 50"	250lb
UP TO 62"	225lb

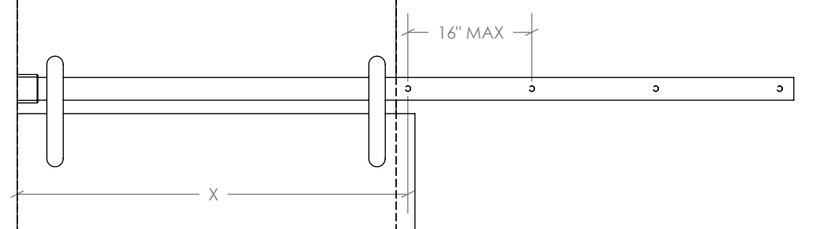

INSTALLED INTO WOOD STUDS

SPAN (X)	MAX. PANEL WEIGHT
UP TO 38"	150lb
UP TO 44"	125lb
UP TO 50"	100lb

SCALE: 3" = 1'-0" (1:4)

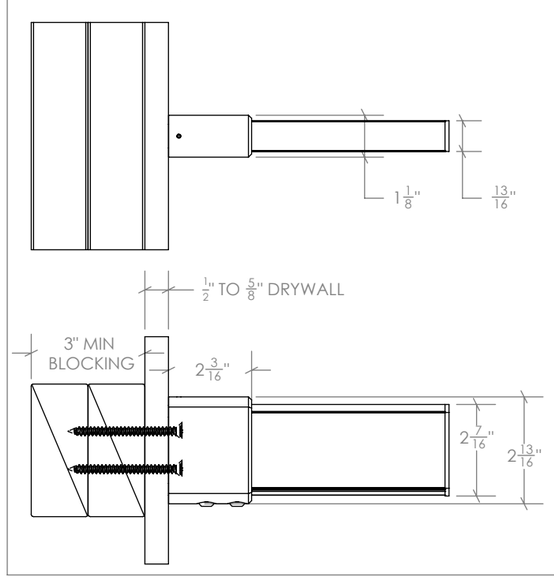

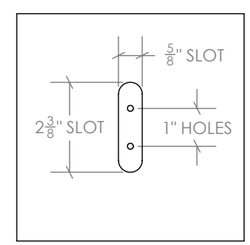

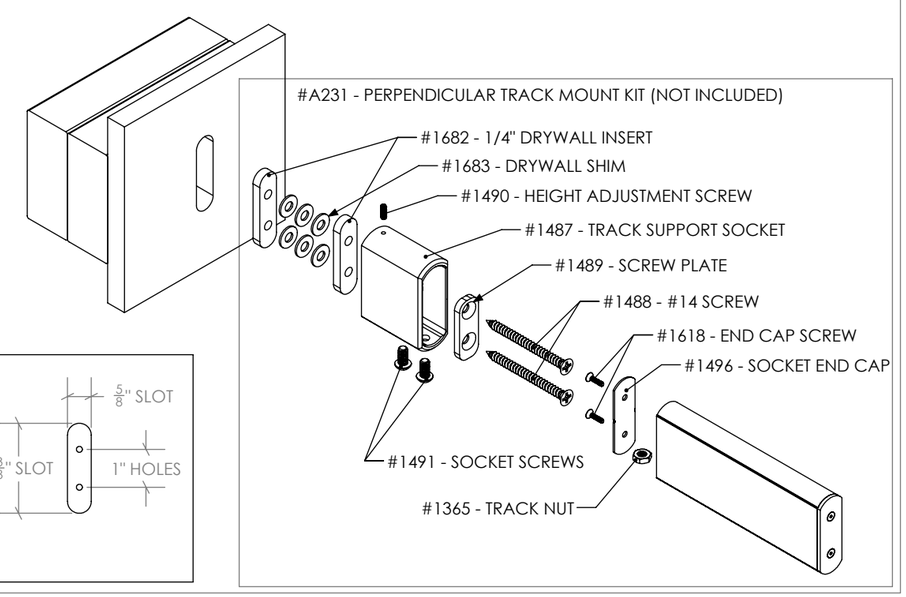

ALL INFORMATION CONTAINED IN THIS DOCUMENT IS THE PROPERTY OF KROWNLAB. ANY REPRODUCTION IN WHOLE OR IN PART IS PROHIBITED WITHOUT PRIOR WRITTEN CONSENT.
KROWNLAB AND THE KROWNLAB LOGO ARE REGISTERED TRADEMARKS OF KROWN LAB, INC.

DOCUMENT:	PRODUCT SPECIFICATIONS - BYPASSING WITH CENTER MOUNT	DOOR APPLICATION:	BYPASSING	DRAWING SCALE:	1" = 1'-0" (1:12)	KROWNLAB 2351 NW York St. Portland, OR 97210 +1 503 292 6998 www.krownlab.com support@krownlab.com
SYSTEM:	TRU-LEVEL™ TRACK	PANEL THICKNESS:	TROLLEY SYSTEM OR BYPASSING DEPENDENT	UNITS:	INCHES	
MOUNTING STYLE:	FRAMED WALL	MAXIMUM WEIGHT:	TROLLEY SYSTEM OR TRACK LENGTH DEPENDENT	DATE:	11/30/2018	

BYPASSING TRACKS ARE ONLY AVAILABLE MADE-TO-MEASURE AND PRE-DRILLED.
IT IS RECOMMENDED TO CONTACT US BEFORE ORDERING DOOR PANELS TO OPTIMIZE DOOR TRAVEL.

COMBINED TOTAL PANEL WIDTH SHOULD BE WIDER THAN THE OPENING BY 14" MINIMUM TO OPTMIZE DOOR TRAVEL:

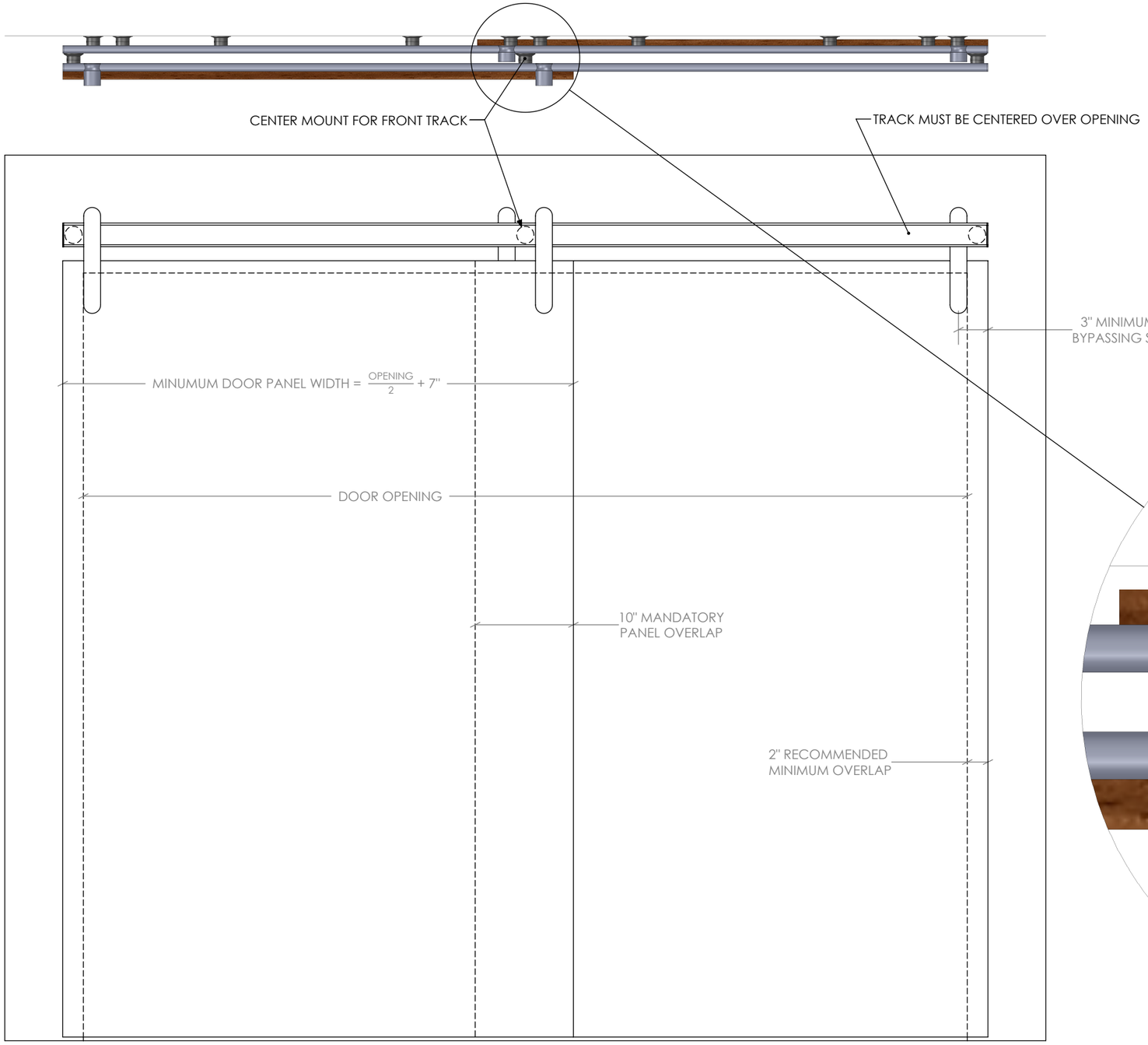

TRACK LENGTH	MAX. PANEL WEIGHT*
UP TO 9FT	225lb
UP TO 11FT	200lb
UP TO 12FT	175lb
UP TO 13FT	150lb

*EACH PANEL

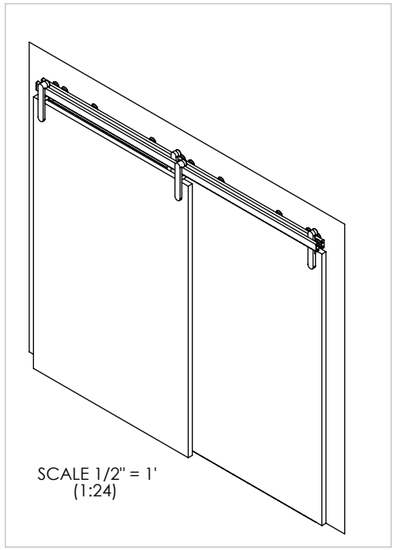

SCALE 1/2" = 1'
(1:24)

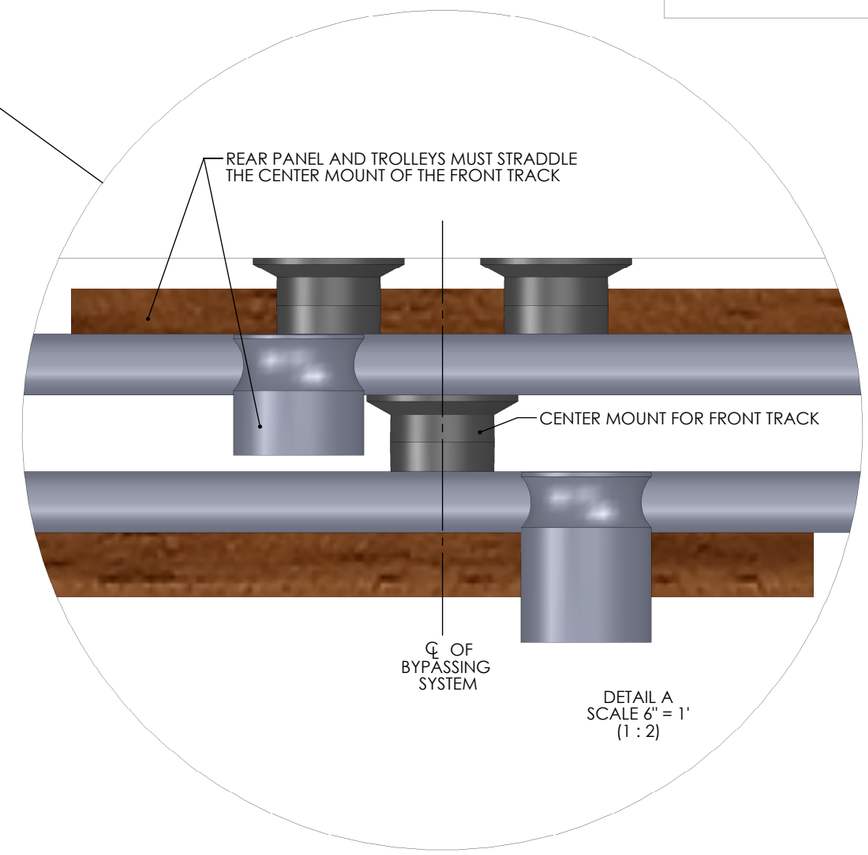

DETAIL A
SCALE 6" = 1'
(1 : 2)

ALL INFORMATION CONTAINED IN THIS DOCUMENT IS THE PROPERTY OF KROWNLAB. ANY REPRODUCTION IN WHOLE OR IN PART IS PROHIBITED WITHOUT PRIOR WRITTEN CONSENT.
KROWNLAB AND THE KROWNLAB LOGO ARE REGISTERED TRADEMARKS OF KROWN LAB, INC.

DOCUMENT:	PRODUCT SPECIFICATIONS - BYPASSING WITHOUT CENTER MOUNT	DOOR APPLICATION:	BYPASSING	DRAWING SCALE:	1" = 1'-0" (1:12)	KROWNLAB 2351 NW York St. Portland, OR 97210 +1 503 292 6998 www.krownlab.com support@krownlab.com
SYSTEM:	TRU-LEVEL™ TRACK	PANEL THICKNESS:	TROLLEY SYSTEM OR BYPASSING DEPENDENT	UNITS:	INCHES	
MOUNTING STYLE:	FRAMED WALL	MAXIMUM WEIGHT:	TRACK LENGTH DEPENDENT	DATE:	11/30/2018	

BYPASSING TRACKS ARE ONLY AVAILABLE MADE-TO-MEASURE AND PRE-DRILLED.
IT IS RECOMMENDED TO CONTACT US BEFORE ORDERING DOOR PANELS TO OPTIMIZE DOOR TRAVEL.

COMBINED TOTAL PANEL WIDTH SHOULD BE WIDER THAN THE OPENING BY 6" MINIMUM TO OPTMIZE DOOR TRAVEL:

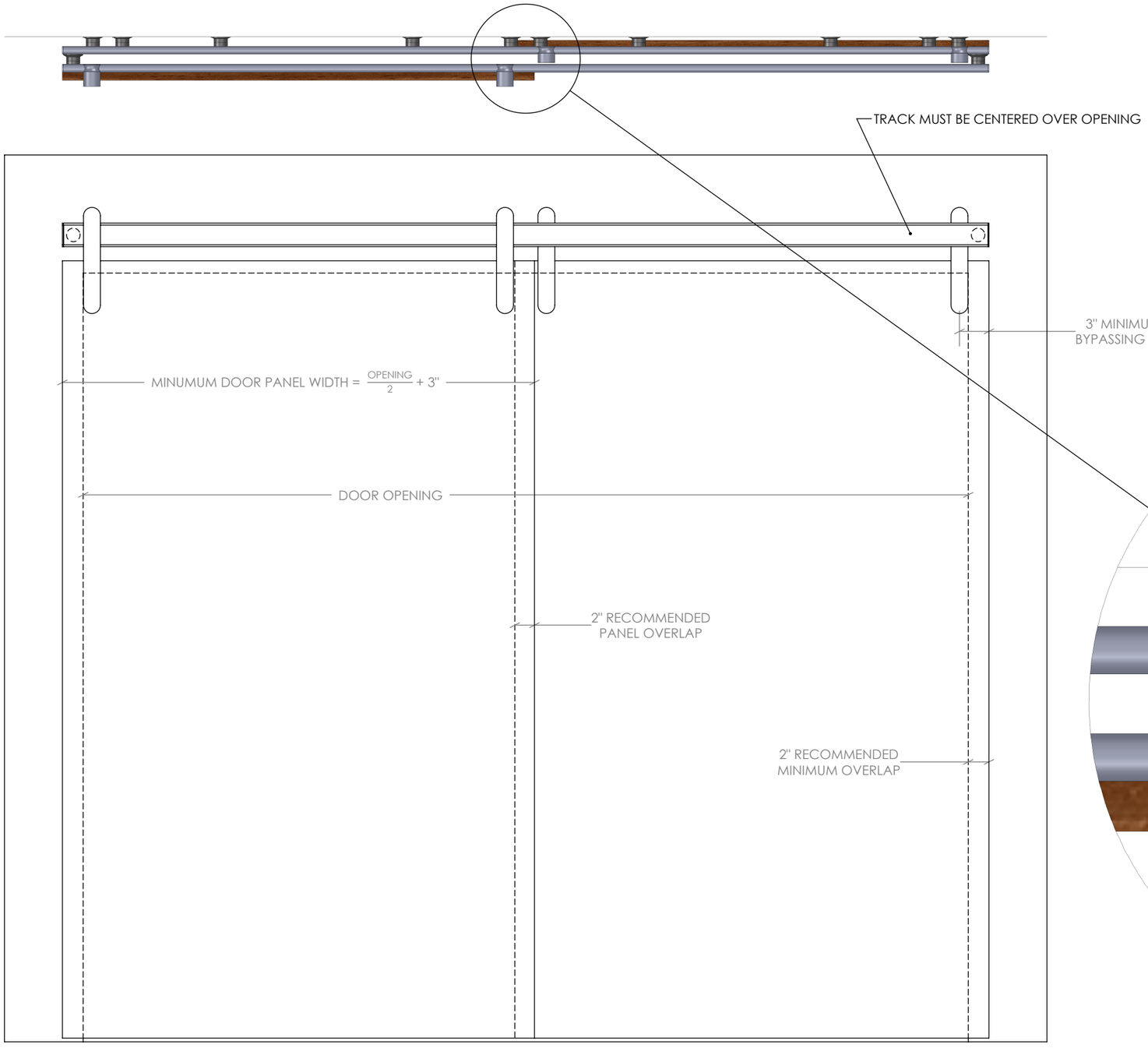

TRACK LENGTH	MAX. PANEL WEIGHT*
UP TO 4FT	150lb
UP TO 5FT	125lb
UP TO 6FT	85lb

*EACH PANEL

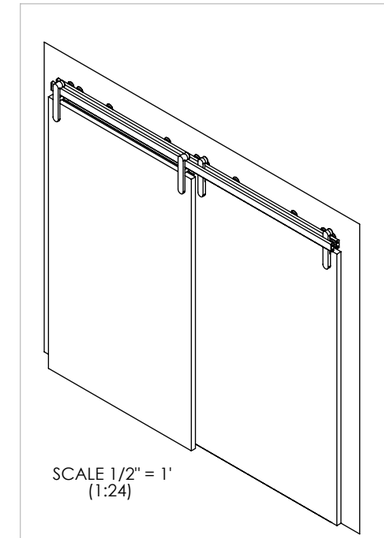

SCALE 1/2" = 1'
(1:24)

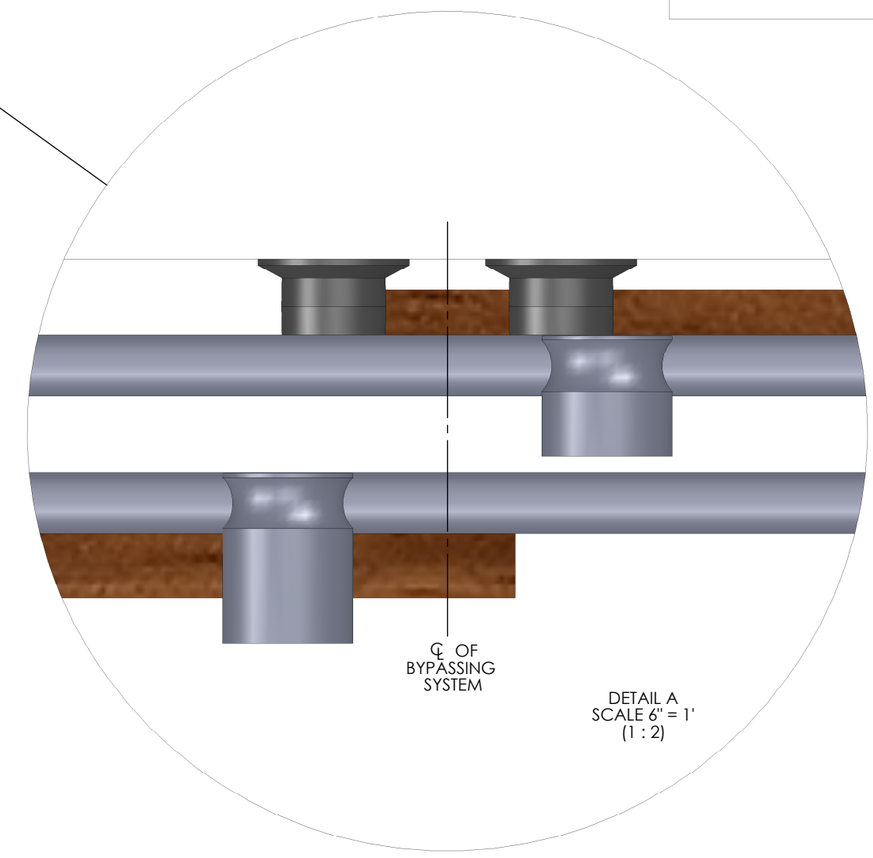

DETAIL A
SCALE 6" = 1'
(1 : 2)

ALL INFORMATION CONTAINED IN THIS DOCUMENT IS THE PROPERTY OF KROWNLAB. ANY REPRODUCTION IN WHOLE OR IN PART IS PROHIBITED WITHOUT PRIOR WRITTEN CONSENT.
KROWNLAB AND THE KROWNLAB LOGO ARE REGISTERED TRADEMARKS OF KROWN LAB, INC.

DOCUMENT:	PRODUCT SPECIFICATIONS - BYPASSING STACKED	DOOR APPLICATION:	BYPASSING STACKED	DRAWING SCALE:	1" = 1'-0" (1:12)	KROWNLAB 2351 NW York St. Portland, OR 97210 +1 503 292 6998 www.krownlab.com support@krownlab.com
SYSTEM:	TRU-LEVEL™ TRACK	PANEL THICKNESS:	TROLLEY SYSTEM OR BYPASSING DEPENDENT	UNITS:	INCHES	
MOUNTING STYLE:	FRAMED WALL	MAXIMUM WEIGHT:	TRACK CONFIGURATION, TRACK LENGTH OR TROLLEY SYSTEM DEPENDENT	DATE:	11/30/2018	

BYPASSING STACKED TRACKS ARE ONLY AVAILABLE MADE-TO-MEASURE AND PRE-DRILLED.
IT IS RECOMMENDED TO CONTACT US BEFORE ORDERING DOOR PANELS TO OPTIMIZE DOOR TRAVEL.

COMBINED TOTAL PANEL WIDTH SHOULD BE WIDER THAN THE OPENING BY THE FOLLOWING AMOUNT TO OPTMIZE DOOR TRAVEL:
WITH OPTIONAL CENTER MOUNT: 14" MINIMUM*
WITHOUT OPTIONAL CENTER MOUNT: 6" MINIMUM*

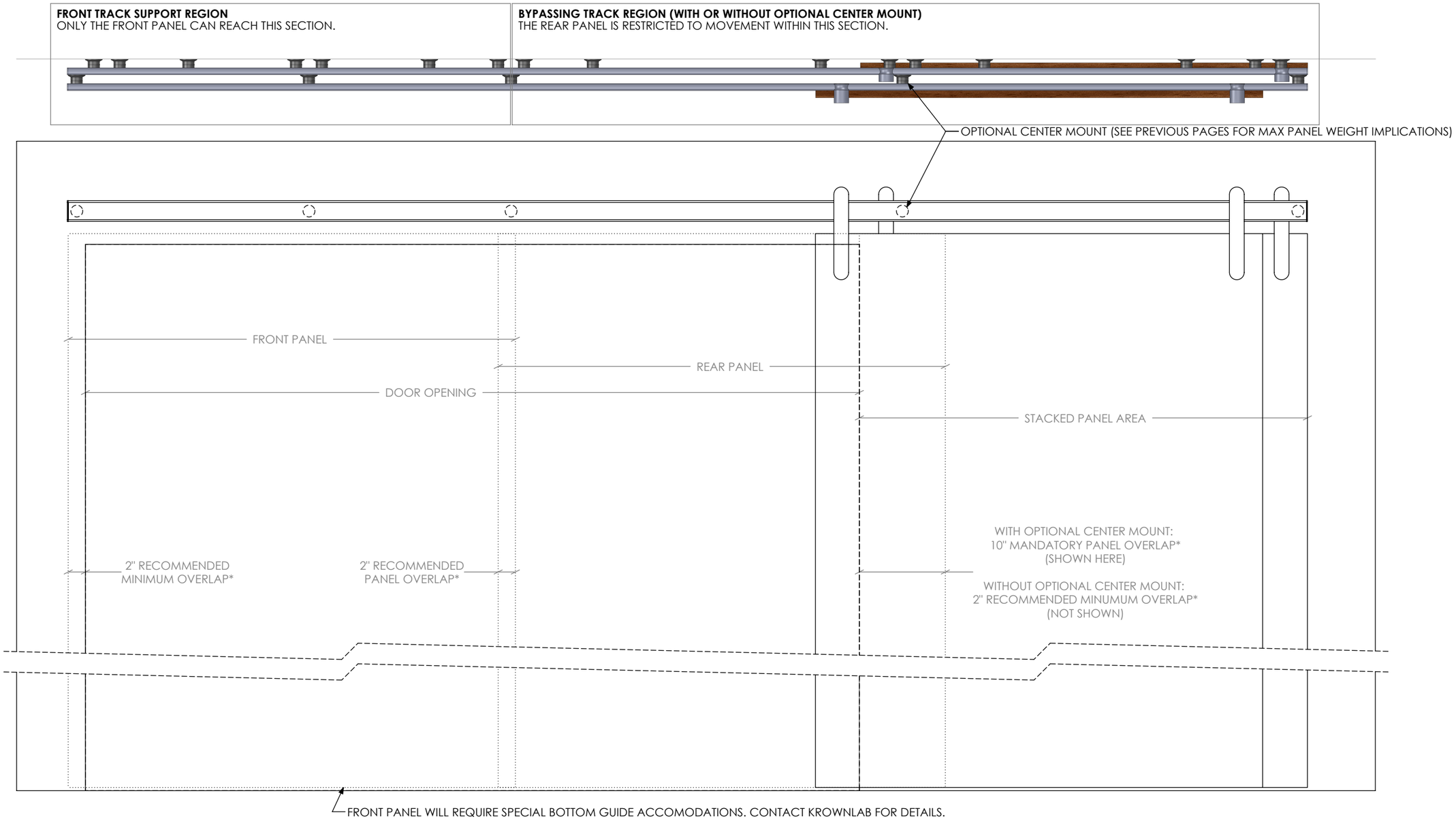

* = THESE ARE MINIMUMS. EXCEEDING THESE VALUES IS RECOMMENDED TO INCREASE PRIVACY IN SOME INSTALLATIONS.

ALL INFORMATION CONTAINED IN THIS DOCUMENT IS THE PROPERTY OF KROWNLAB. ANY REPRODUCTION IN WHOLE OR IN PART IS PROHIBITED WITHOUT PRIOR WRITTEN CONSENT.
KROWNLAB AND THE KROWNLAB LOGO ARE REGISTERED TRADEMARKS OF KROWN LAB, INC.

DOCUMENT:	PRODUCT SPECIFICATIONS - BYPASSING PANEL CLEARANCE	DOOR APPLICATION:	BYPASSING	DRAWING SCALE:	1" = 1'-0" (1:2)	KROWNLAB 2351 NW York St. Portland, OR 97210 +1 503 292 6998 www.krownlab.com support@krownlab.com
SYSTEM:	TRU-LEVEL™ TRACK	PANEL THICKNESS:	TROLLEY SYSTEM OR BYPASSING DEPENDENT	UNITS:	INCHES	
MOUNTING STYLE:	FRAMED WALL	MAXIMUM WEIGHT:	SYSTEM DEPENDENT AND TRACK LENGTH DEPENDENT	DATE:	3/12/2018	

MOUNTING STYLE	PANEL THICKNESS*
TOP MOUNT	1-3/8" TO 2-1/2"
FACE MOUNT**	3/4" TO 1-3/8"
GLASS MOUNT	3/8" - 1/2"

*NOT ACCOUNTING FOR BASEBOARD (IF EXISTING) OR OPTIONAL DOOR PULLS
**ODEN AND BALDUR ONLY

TOP MOUNT

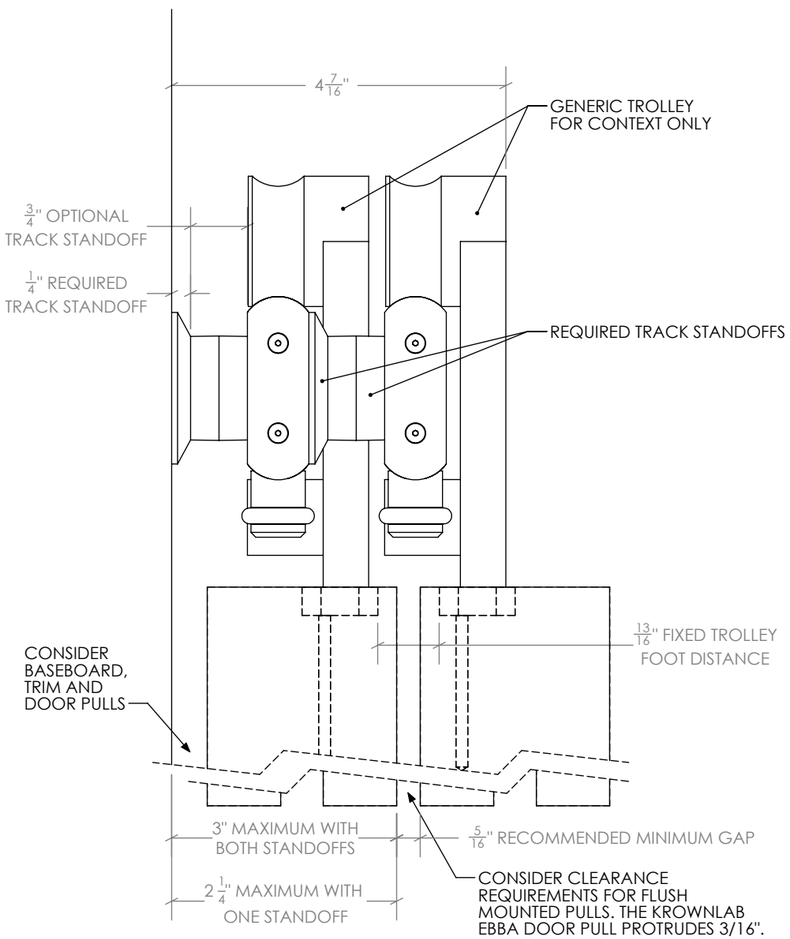

FACE MOUNT**
(**ODEN AND BALDUR ONLY)

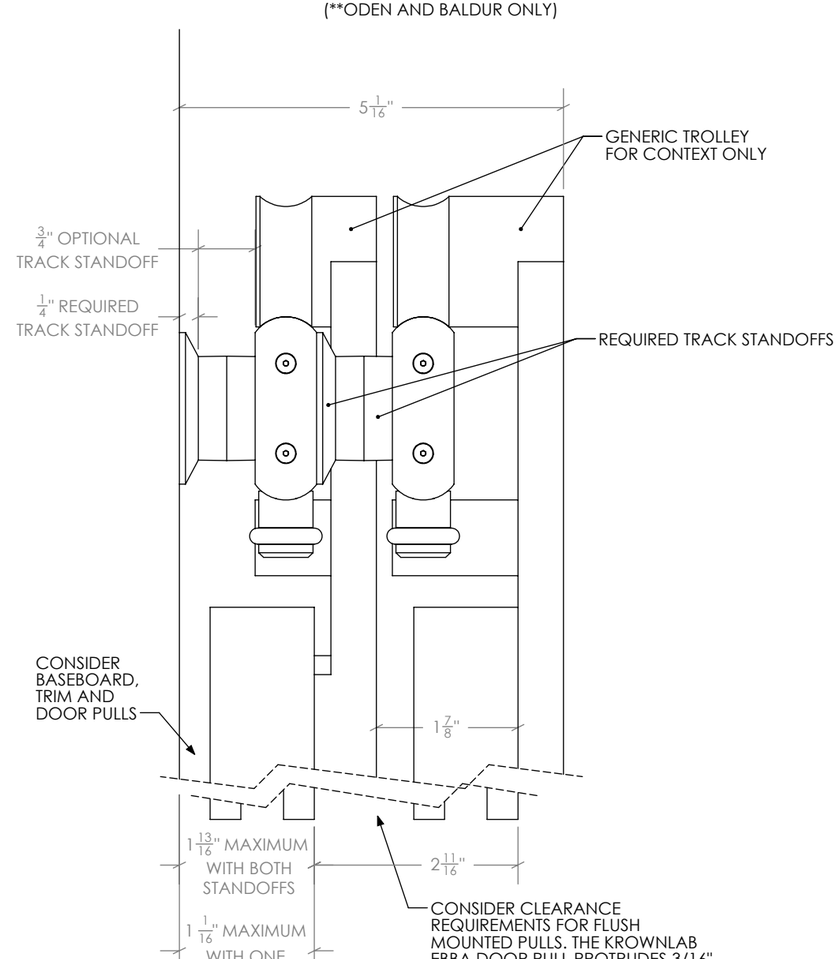

GLASS MOUNT

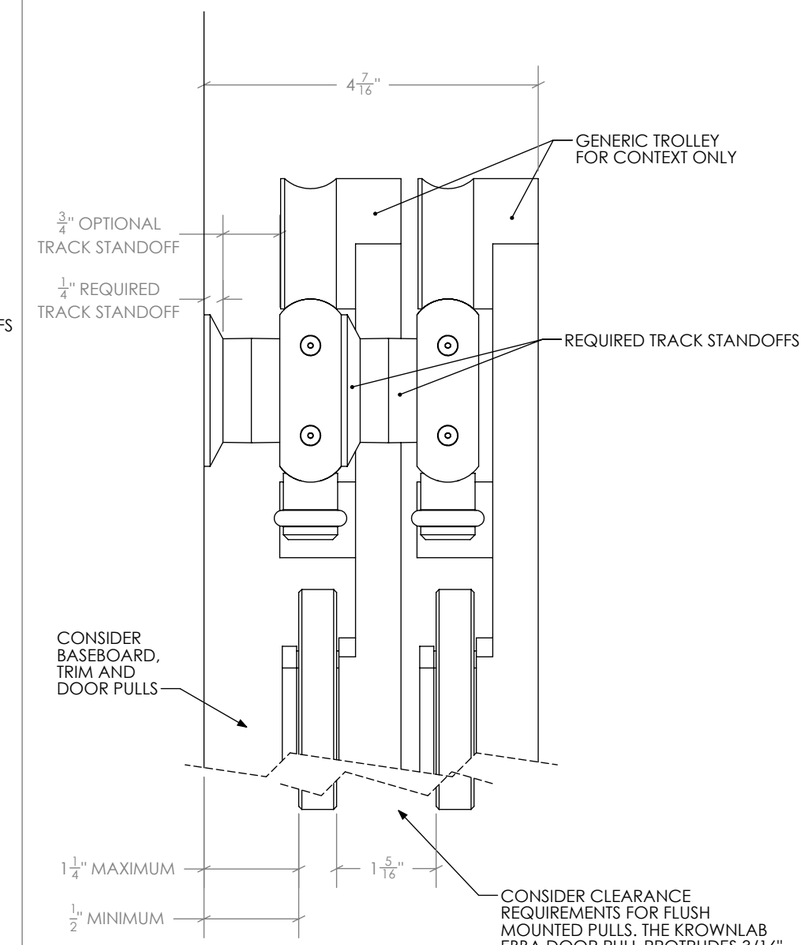

ALL INFORMATION CONTAINED IN THIS DOCUMENT IS THE PROPERTY OF KROWNLAB. ANY REPRODUCTION IN WHOLE OR IN PART IS PROHIBITED WITHOUT PRIOR WRITTEN CONSENT.
KROWNLAB AND THE KROWNLAB LOGO ARE REGISTERED TRADEMARKS OF KROWN LAB, INC.

DOCUMENT:	PRODUCT SPECIFICATIONS - UNDRILLED TRACK DRILL PATTERN GUIDE	DOOR APPLICATION:	SINGLE & BI-PARTING	DRAWING SCALE:	1" = 1'-0" (1:12)	KROWNLAB 2351 NW York St. Portland, OR 97210 +1 503 292 6998 www.krownlab.com support@krownlab.com
SYSTEM:	TRU-LEVEL™ TRACK	PANEL THICKNESS:	TROLLEY SYSTEM DEPENDENT	UNITS:	INCHES	
MOUNTING STYLE:	FRAMED WALL	MAXIMUM WEIGHT:	SEE BELOW	DATE:	9/25/2018	

STUD DRILL PATTERN: (250LB MAX* PER TRACK)

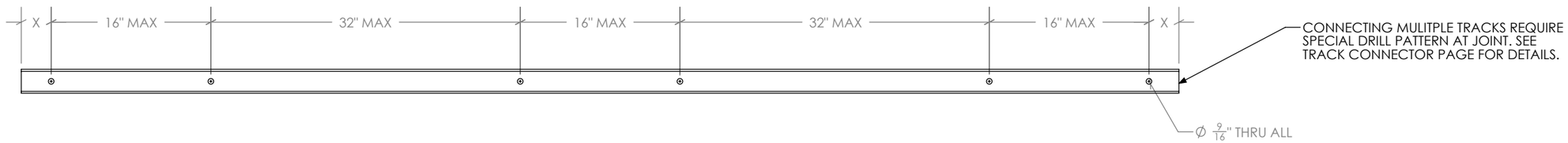

PANEL WEIGHT	X	MOUNTING POINTS
UP TO 100 LBS	5"	4 MINIMUM
101 TO 200 LBS	4"	6 MINIMUM
201 TO 250 LBS	3"	6 MINIMUM

"X" IS THE MAXIMUM LENGTH OF TRACK ALLOWED BEYOND END MOUNTING POINTS

STRUCTURAL BLOCKING DRILL PATTERN: (400LB MAX* PER TRACK)

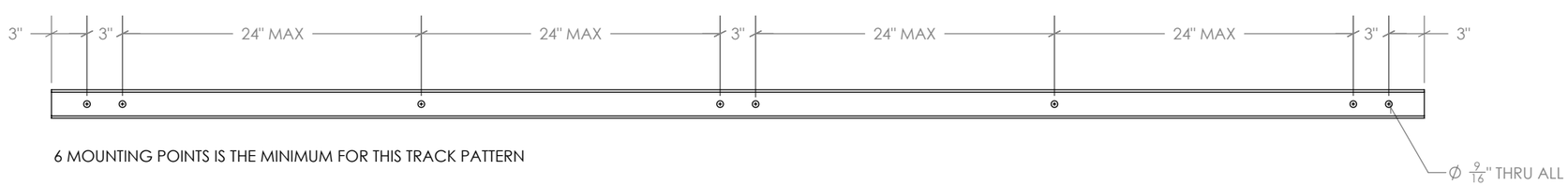

6 MOUNTING POINTS IS THE MINIMUM FOR THIS TRACK PATTERN

* WEIGHT LIMIT MAY BE FURTHER RESTRICTED BY TROLLEY SYSTEM

ALL INFORMATION CONTAINED IN THIS DOCUMENT IS THE PROPERTY OF KROWNLAB. ANY REPRODUCTION IN WHOLE OR IN PART IS PROHIBITED WITHOUT PRIOR WRITTEN CONSENT.
KROWNLAB AND THE KROWNLAB LOGO ARE REGISTERED TRADEMARKS OF KROWN LAB, INC.

DOCUMENT:	PRODUCT SPECIFICATIONS - BYPASSING TRACK DRILL PATTERN GUIDE	DOOR APPLICATION:	BYPASSING	DRAWING SCALE:	1" = 1'-0" (1:12)	KROWNLAB 2351 NW York St. Portland, OR 97210 +1 503 292 6998 www.krownlab.com support@krownlab.com
SYSTEM:	TRU-LEVEL™ TRACK	PANEL THICKNESS:	TROLLEY SYSTEM OR BYPASSING DEPENDENT	UNITS:	INCHES	
MOUNTING STYLE:	FRAMED WALL	MAXIMUM WEIGHT:	TRACK CONFIGURATION, TRACK LENGTH OR TROLLEY SYSTEM DEPENDENT	DATE:	3/12/2018	

BYPASSING TRACKS ARE ONLY AVAILABLE MADE-TO-MEASURE.
KROWNLAB WILL CONFIGURE THE FRONT AND REAR TRACKS USING THE RULES BELOW:

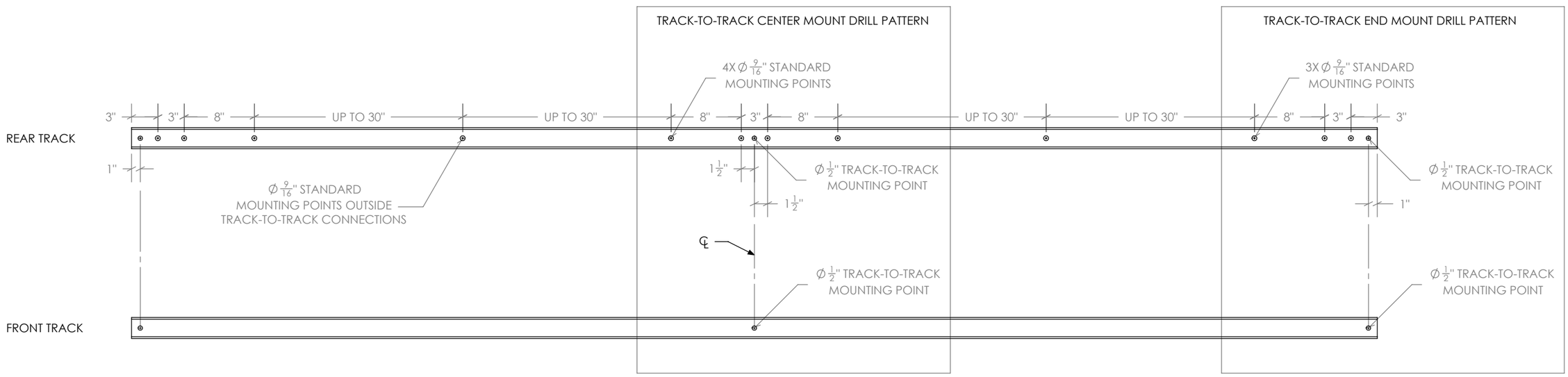

ALL INFORMATION CONTAINED IN THIS DOCUMENT IS THE PROPERTY OF KROWNLAB. ANY REPRODUCTION IN WHOLE OR IN PART IS PROHIBITED WITHOUT PRIOR WRITTEN CONSENT.
KROWNLAB AND THE KROWNLAB LOGO ARE REGISTERED TRADEMARKS OF KROWN LAB, INC.

DOCUMENT:	PRODUCT SPECIFICATIONS - GLASS DOOR PANEL SPECIFICATIONS	DOOR APPLICATION:	SINGLE, BI-PARTING, BYPASSING	DRAWING SCALE:	1" = 1'-0" (1:12)	KROWNLAB 2351 NW York St. Portland, OR 97210 +1 503 292 6998 www.krownlab.com support@krownlab.com
SYSTEM:	TRU-LEVEL™ TRACK	PANEL THICKNESS:	3/8" TO 1/2" (CONTACT US FOR PANELS OUTSIDE OF THIS RANGE)	UNITS:	INCHES	
MOUNTING STYLE:	FRAMED WALL	MAXIMUM WEIGHT:	TROLLEY SYSTEM OR TRACK CONFIGURATION DEPENDENT	DATE:	5/17/2018	

GLASS PANELS MUST BE FLAT POLISHED AND HAVE A 1MM CHAMFER ON ALL EDGES.

ALL HOLES MUST BE DRILLED OR CNC MACHINED WITH STRAIGHT WALLS AND SEAMED EDGES. DO NOT WATER-JET - NO TAPERED HOLES.

ALL TEMPERED GLASS IS SUBJECT TO EXPERIENCE SPONTANIOUS BREAKAGE. IT IS THE BUYERS RESPONSIBILITY TO DETERMINE AND APPROVE GLASS SPECIFICATION(S) SUITABLE TO MEET ALL FACTORS RELEVANT TO THEIR PARTICULAR USE OR APPLICATION IN CONJUNCTION WITH ALL KROWN LAB, INC.'S PRODUCTS.

REFERENCE ASTM C1048, 7.9.5

TROLLEY ATTACHMENT POINTS: LOKI TROLLEYS ONLY

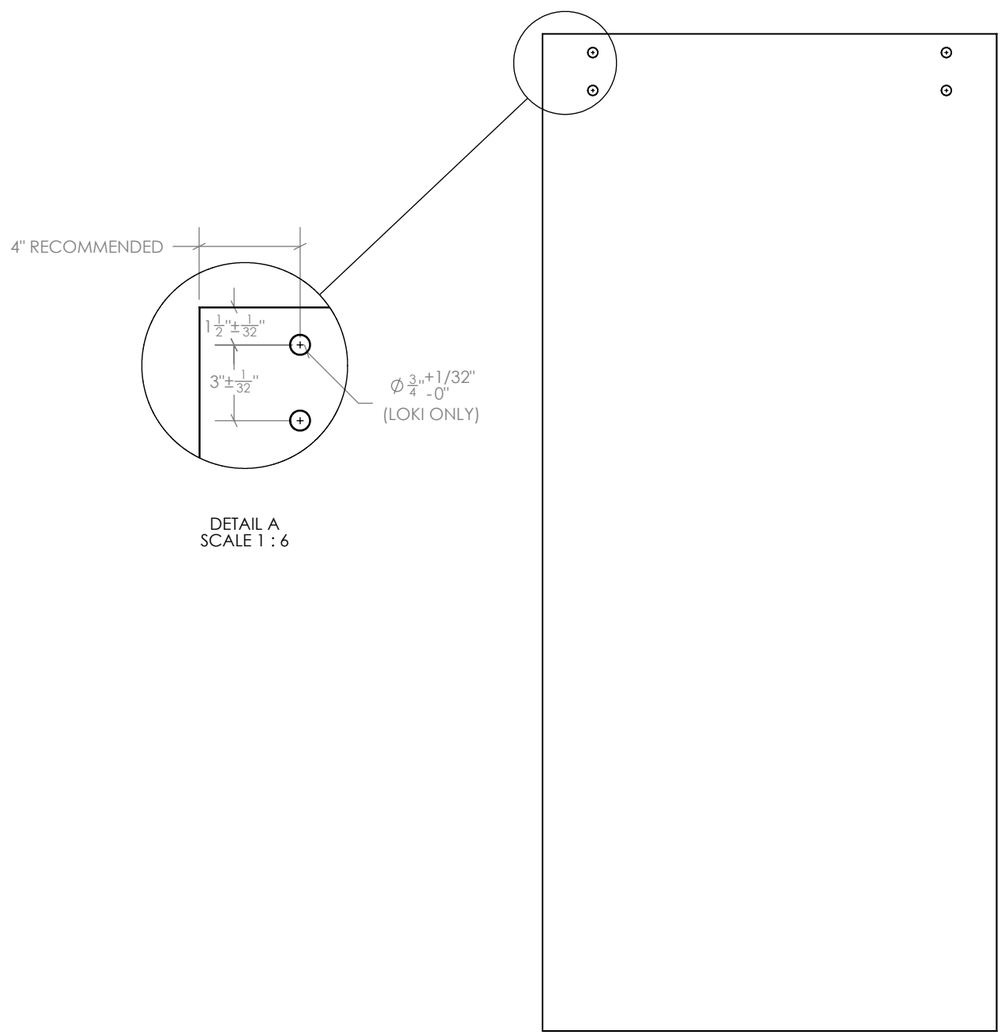

DETAIL A
SCALE 1 : 6

TROLLEY ATTACHMENT POINTS: ODEN AND BALDUR TROLLEYS ONLY

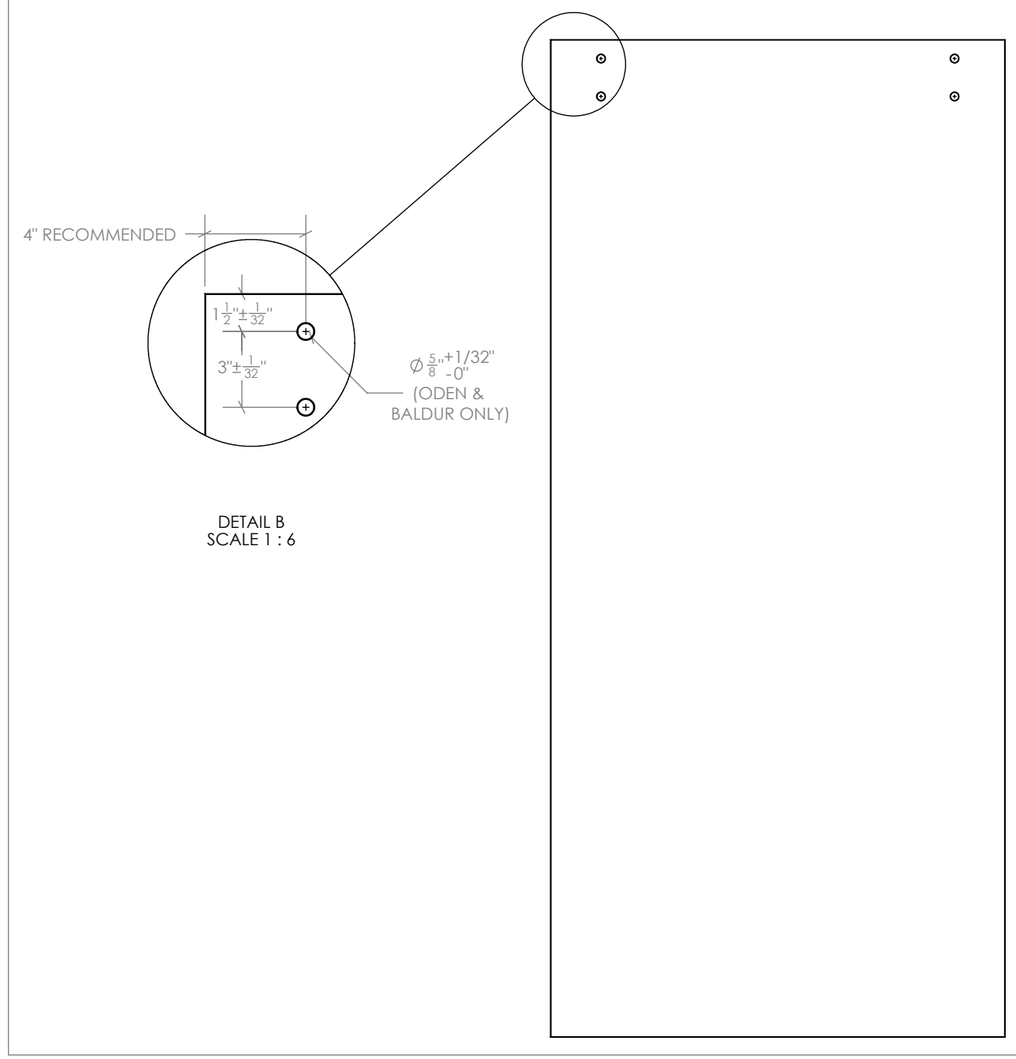

DETAIL B
SCALE 1 : 6

ALL INFORMATION CONTAINED IN THIS DOCUMENT IS THE PROPERTY OF KROWNLAB. ANY REPRODUCTION IN WHOLE OR IN PART IS PROHIBITED WITHOUT PRIOR WRITTEN CONSENT.
KROWNLAB AND THE KROWNLAB LOGO ARE REGISTERED TRADEMARKS OF KROWN LAB, INC.

DOCUMENT:	PRODUCT SPECIFICATIONS - DOOR CONFIGURATIONS	DOOR APPLICATION:	SINGLE & BI-PARTING	DRAWING SCALE:	1/2" = 1'-0" (1:24)	KROWNLAB 2351 NW York St. Portland, OR 97210 +1 503 292 6998 www.krownlab.com support@krownlab.com
SYSTEM:	TRU-LEVEL™ TRACK	PANEL THICKNESS:	3/8" TO 1/2" (CONTACT US FOR PANELS OUTSIDE OF THIS RANGE)	UNITS:	INCHES	
MOUNTING STYLE:	GLASS WALL	MAXIMUM WEIGHT:	TROLLEY SYSTEM OR TRACK CONFIGURATION DEPENDENT	DATE:	5/17/2018	

SINGLE

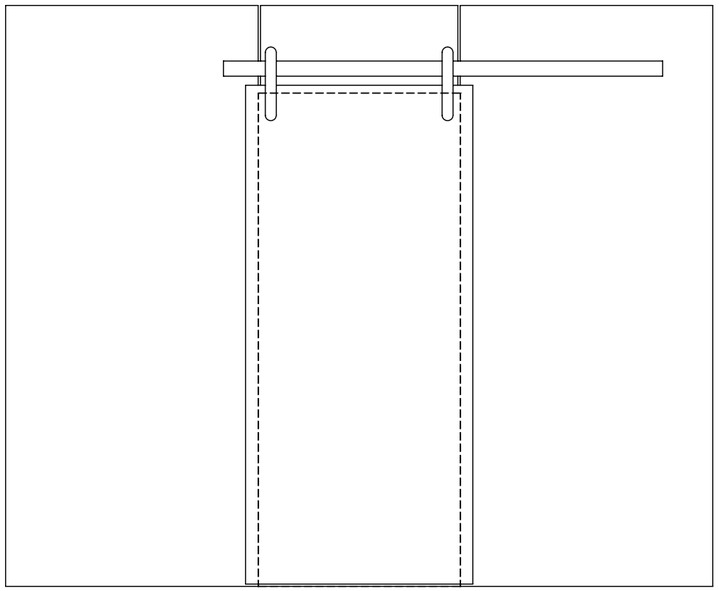

SINGLE - PERPENDICULAR WALL

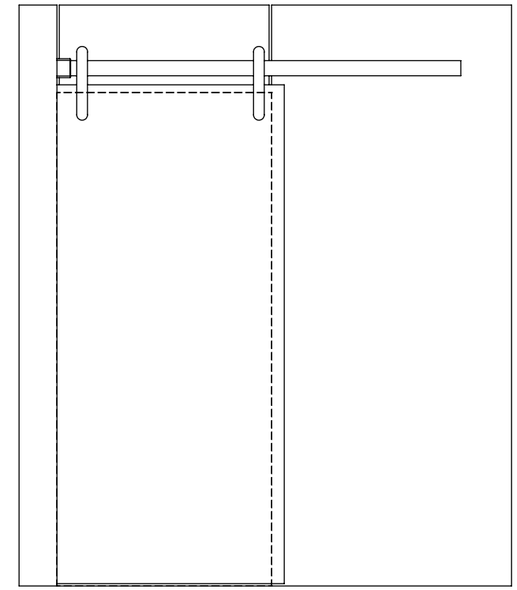

BI-PARTING

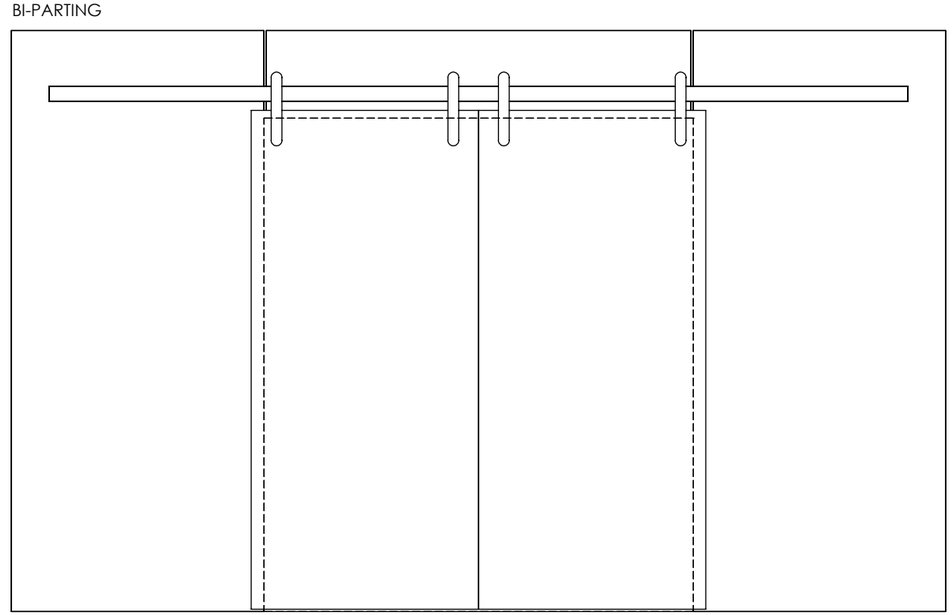

ALL INFORMATION CONTAINED IN THIS DOCUMENT IS THE PROPERTY OF KROWNLAB. ANY REPRODUCTION IN WHOLE OR IN PART IS PROHIBITED WITHOUT PRIOR WRITTEN CONSENT.
KROWNLAB AND THE KROWNLAB LOGO ARE REGISTERED TRADEMARKS OF KROWN LAB, INC.

DOCUMENT:	PRODUCT SPECIFICATIONS	DOOR APPLICATION:	SINGLE & BI-PARTING	DRAWING SCALE:	6" = 1'-0" (1:2)	KROWNLAB 2351 NW York St. Portland, OR 97210 +1 503 292 6998 www.krownlab.com support@krownlab.com
SYSTEM:	TRU-LEVEL™ TRACK	PANEL THICKNESS:	3/8" TO 1/2" (CONTACT US FOR PANELS OUTSIDE OF THIS RANGE)	UNITS:	INCHES	
MOUNTING STYLE:	GLASS WALL	MAXIMUM WEIGHT:	TROLLEY SYSTEM DEPENDENT	DATE:	5/17/2018	

WHAT'S INCLUDED:
1 x - #Txxxx - TRU-LEVEL™ TRACK SYSTEM WITH ALL MOUNTING HARDWARE:
X x - #A257 - STANDARD GLASS TRACK MOUNTING KIT
2 x - #A214 - DOOR STOP KIT
X x - #A213 - TRACK CONNECTOR KIT (1 x PER TRACK JOINT INLCUDED)

#A214 - DOOR STOP KIT (x 2 INCLUDED*)

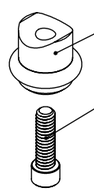

* = THE DOOR STOP MAY DIFFER - MULTIPLE OPTIONS EXIST
VISIT WWW.KROWNLAB.COM FOR ALL OPTIONS

#A217 - TRACK SHIM KIT (NOT INCLUDED)

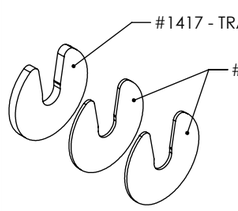

TRACK SHIMS ARE DESIGNED TO BE INSTALLED AGAINST TRACK

#A213 - TRACK CONNECTOR KIT
(1 x PER TRACK JOINT INLCUDED)

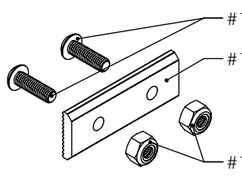

#Txxxx - TRU-LEVEL™ TRACK SYSTEM

#A257 - STANDARD GLASS TRACK MOUNT KIT (QUANTITY MATCHES THE TRACK DRILL PATTERN)

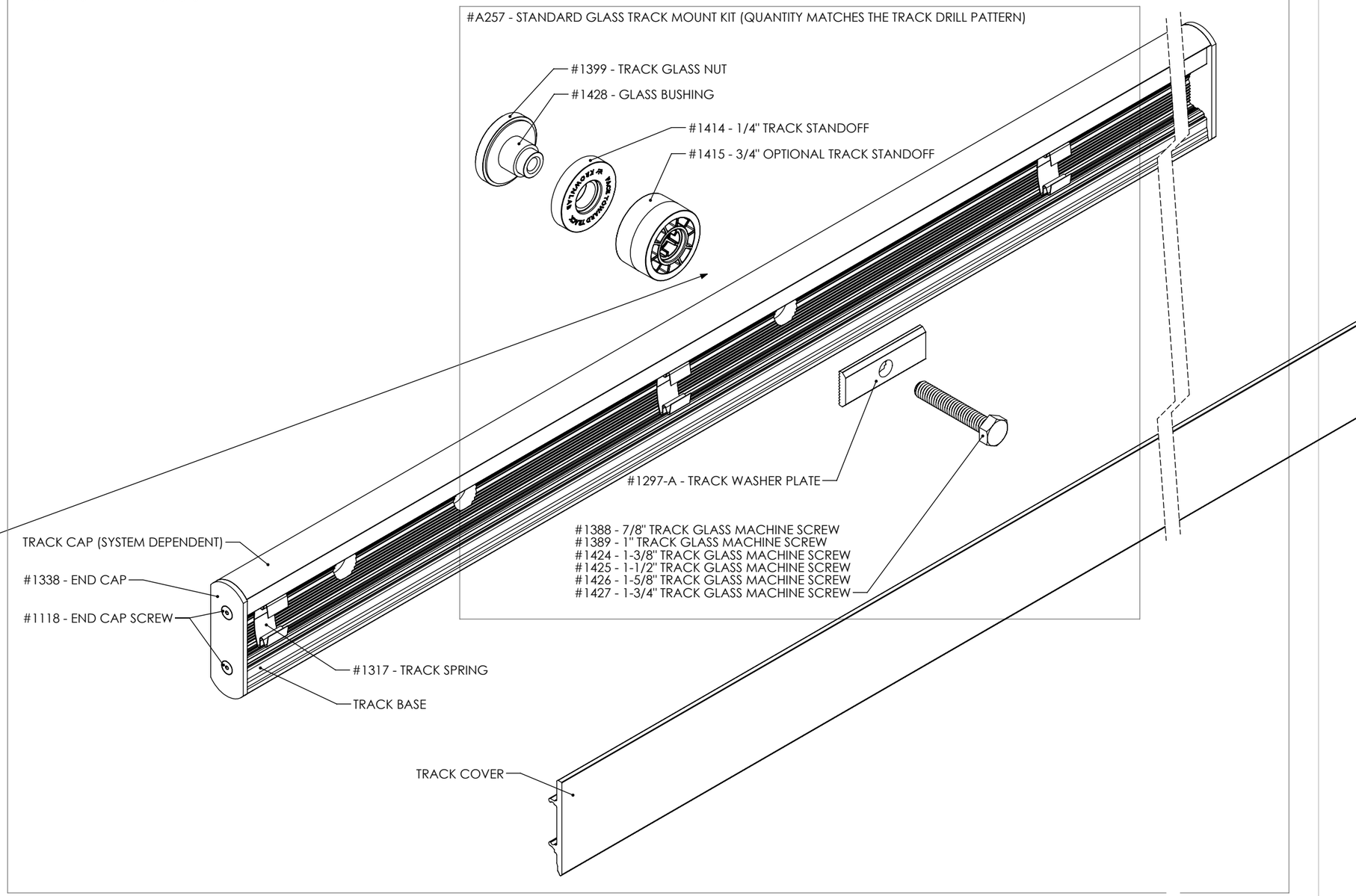

ALL INFORMATION CONTAINED IN THIS DOCUMENT IS THE PROPERTY OF KROWNLAB. ANY REPRODUCTION IN WHOLE OR IN PART IS PROHIBITED WITHOUT PRIOR WRITTEN CONSENT.
KROWNLAB AND THE KROWNLAB LOGO ARE REGISTERED TRADEMARKS OF KROWN LAB, INC.

DOCUMENT:	PRODUCT SPECIFICATIONS - STANDARD GLASS TRACK MOUNTING POINT	DOOR APPLICATION:	SINGLE & BI-PARTING	DRAWING SCALE:	6" = 1'-0" (1:2)	KROWNLAB 2351 NW York St. Portland, OR 97210 +1 503 292 6998 www.krownlab.com support@krownlab.com
SYSTEM:	TRU-LEVEL™ TRACK	PANEL THICKNESS:	3/8" TO 1/2" (CONTACT US FOR PANELS OUTSIDE OF THIS RANGE)	UNITS:	INCHES	
MOUNTING STYLE:	GLASS WALL	MAXIMUM WEIGHT:	TROLLEY SYSTEM DEPENDENT	DATE:	5/17/2018	

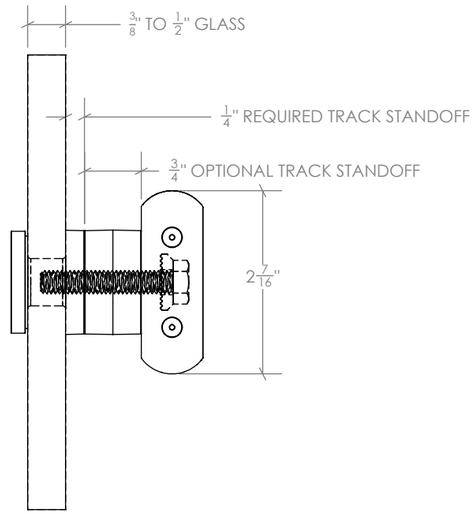

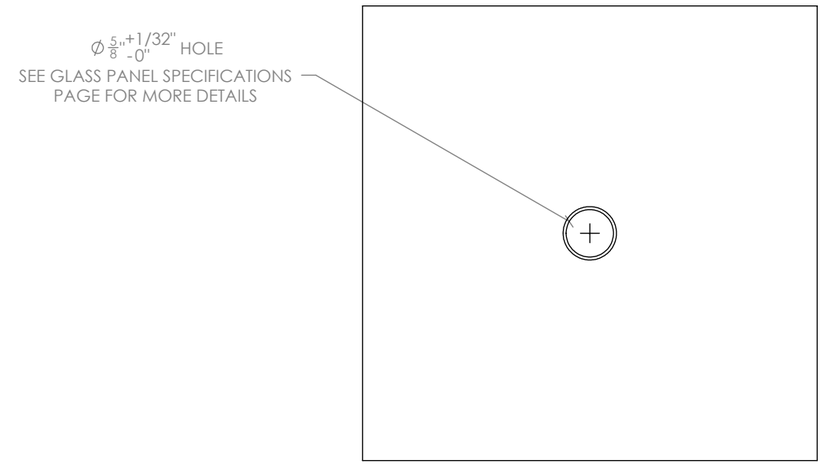

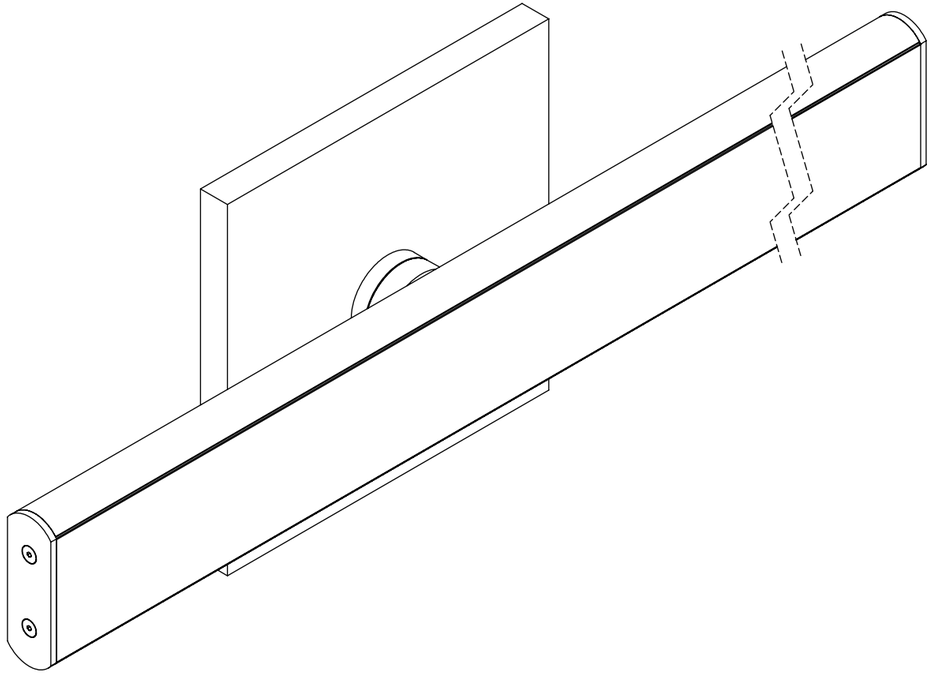

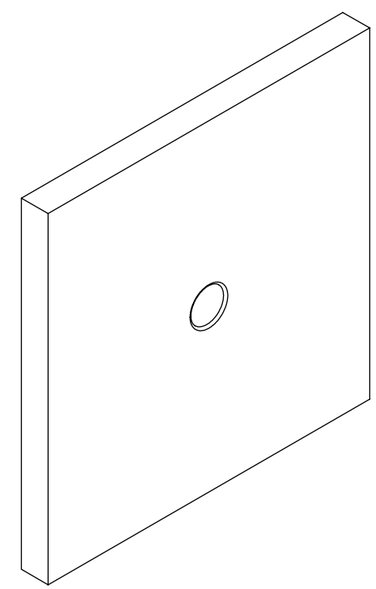

ALL INFORMATION CONTAINED IN THIS DOCUMENT IS THE PROPERTY OF KROWNLAB. ANY REPRODUCTION IN WHOLE OR IN PART IS PROHIBITED WITHOUT PRIOR WRITTEN CONSENT.
KROWNLAB AND THE KROWNLAB LOGO ARE REGISTERED TRADEMARKS OF KROWN LAB, INC.

DOCUMENT:	PRODUCT SPECIFICATIONS - TRACK CONNECTOR	DOOR APPLICATION:	SINGLE & BI-PARTING	DRAWING SCALE:	6" = 1'-0" (1:2)	KROWNLAB 2351 NW York St. Portland, OR 97210 +1 503 292 6998 www.krownlab.com support@krownlab.com
SYSTEM:	TRU-LEVEL™ TRACK	PANEL THICKNESS:	TROLLEY SYSTEM DEPENDENT	UNITS:	INCHES	
MOUNTING STYLE:	ALL WALL TYPES	MAXIMUM WEIGHT:	TROLLEY SYSTEM DEPENDENT	DATE:	5/17/2018	

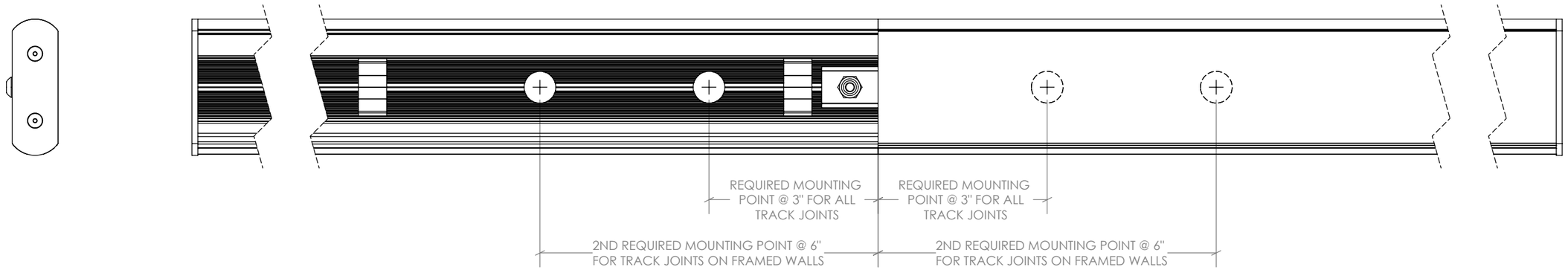

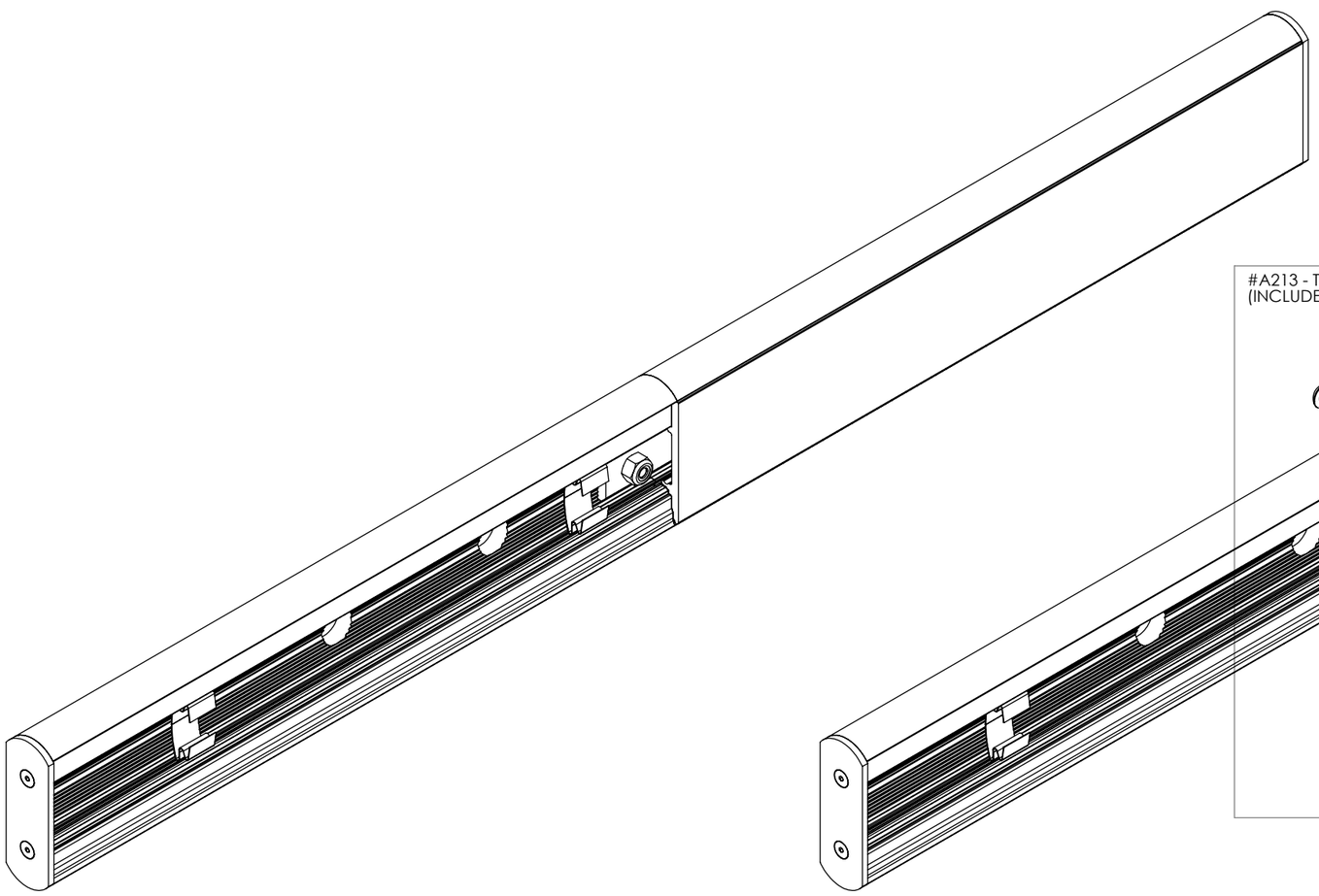

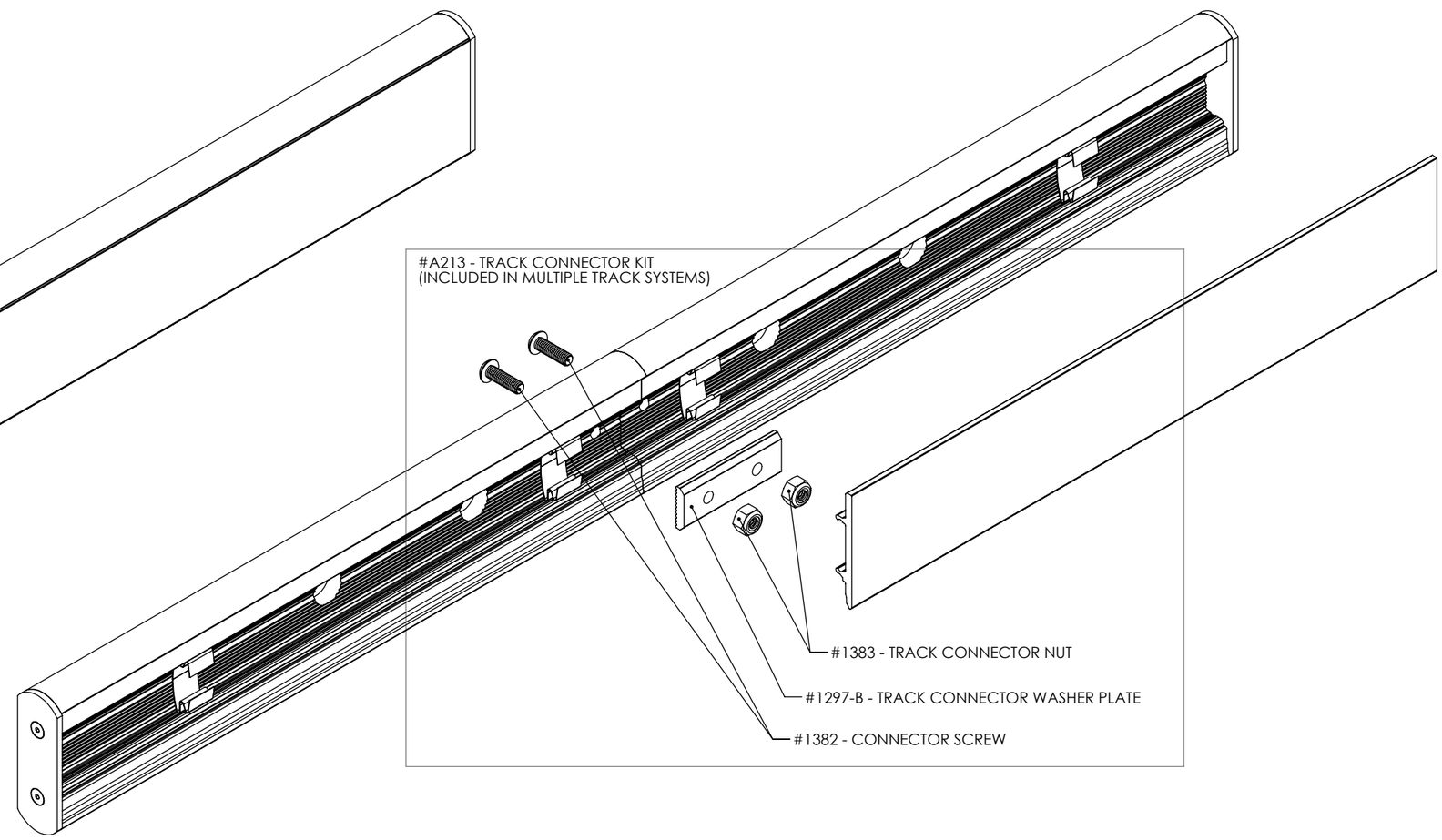

ALL INFORMATION CONTAINED IN THIS DOCUMENT IS THE PROPERTY OF KROWNLAB. ANY REPRODUCTION IN WHOLE OR IN PART IS PROHIBITED WITHOUT PRIOR WRITTEN CONSENT.
KROWNLAB AND THE KROWNLAB LOGO ARE REGISTERED TRADEMARKS OF KROWN LAB, INC.

DOCUMENT:	PRODUCT SPECIFICATIONS - PERPENDICULAR TRACK MOUNTING POINT	DOOR APPLICATION:	SINGLE & BI-PARTING	DRAWING SCALE:	3/4" = 1'-0" (1:16)	KROWNLAB 2351 NW York St. Portland, OR 97210 +1 503 292 6998 www.krownlab.com support@krownlab.com
SYSTEM:	TRU-LEVEL™ TRACK	PANEL THICKNESS:	3/8" TO 1/2" (CONTACT US FOR PANELS OUTSIDE OF THIS RANGE)	UNITS:	INCHES	
MOUNTING STYLE:	GLASS WALL	MAXIMUM WEIGHT:	TROLLEY SYSTEM OR TRACK CONFIGURATION DEPENDENT	DATE:	11/9/2018	

GLASS WALL TO PERPENDICULAR WALL (WITHOUT TRANSOM)

SPAN (X)	MAX. PANEL WEIGHT
UP TO 38"	300lb
UP TO 44"	275lb
UP TO 50"	250lb
UP TO 62"	225lb

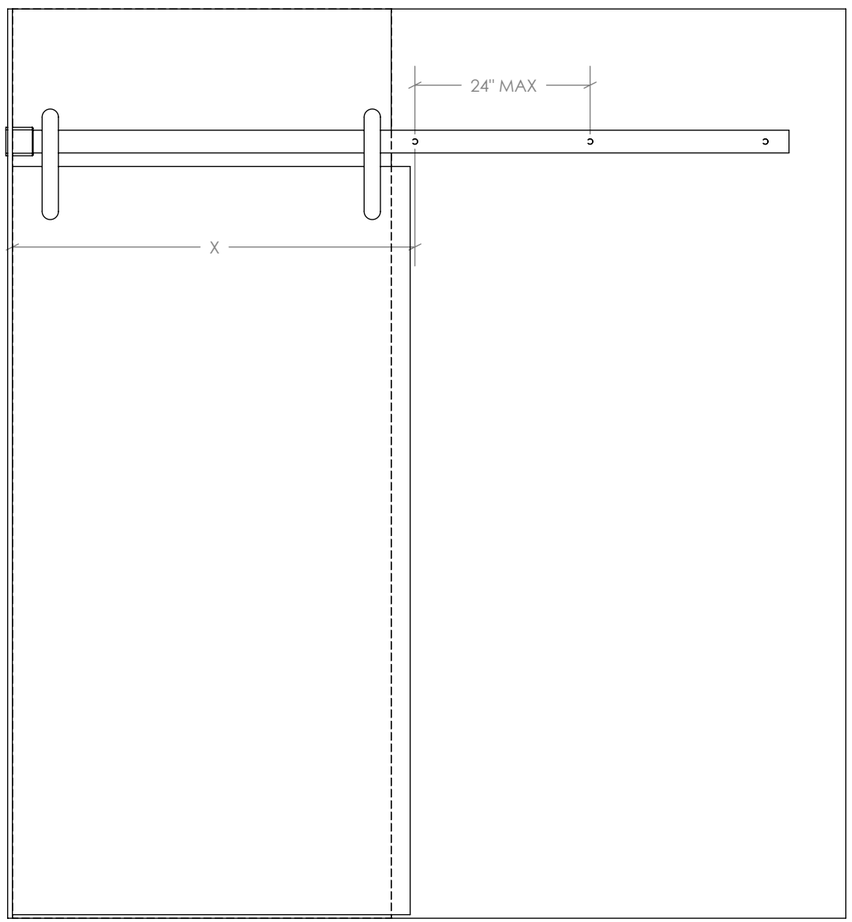

PERPENDICULAR GLASS WALL
SCALE: 3" = 1'-0" (1:4)

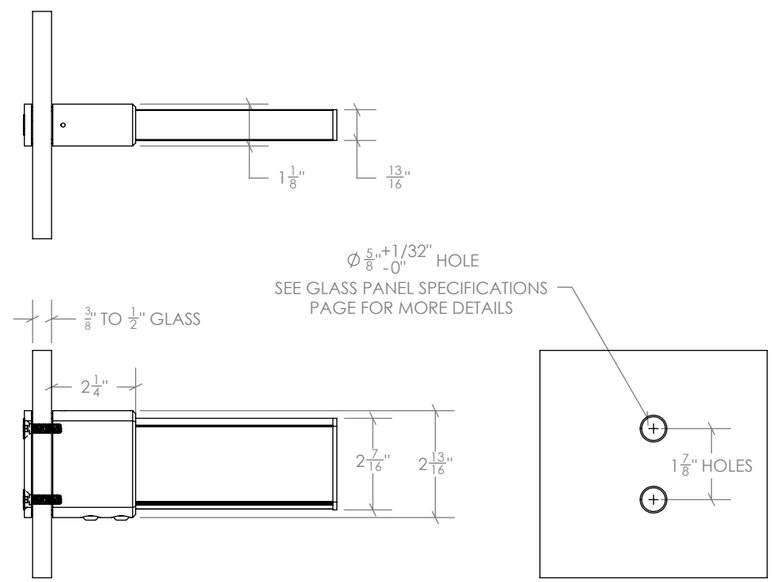

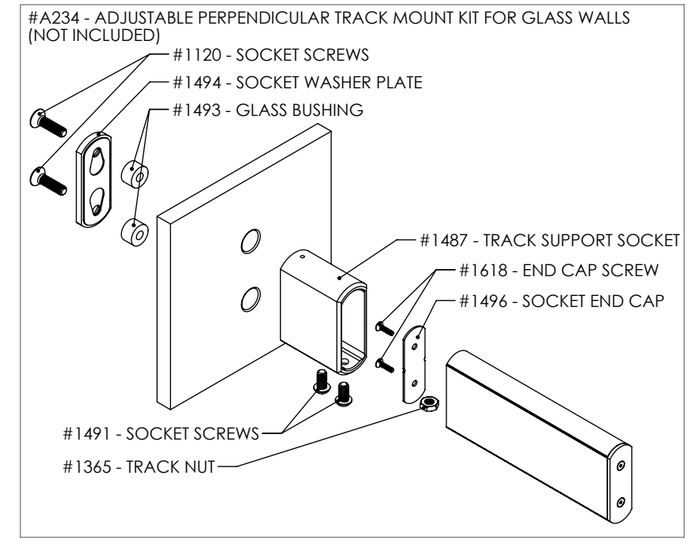

PERPENDICULAR FRAMED WALL
SCALE: 3" = 1'-0" (1:4)

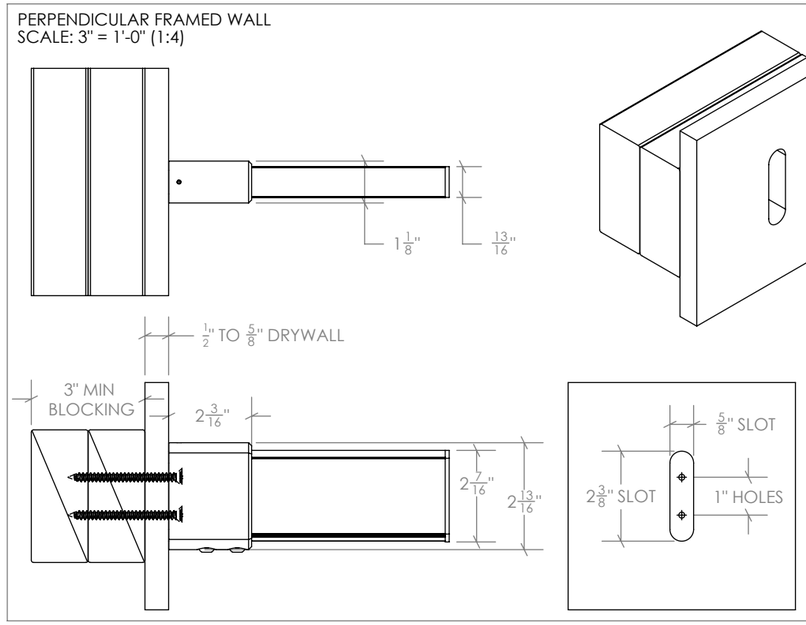

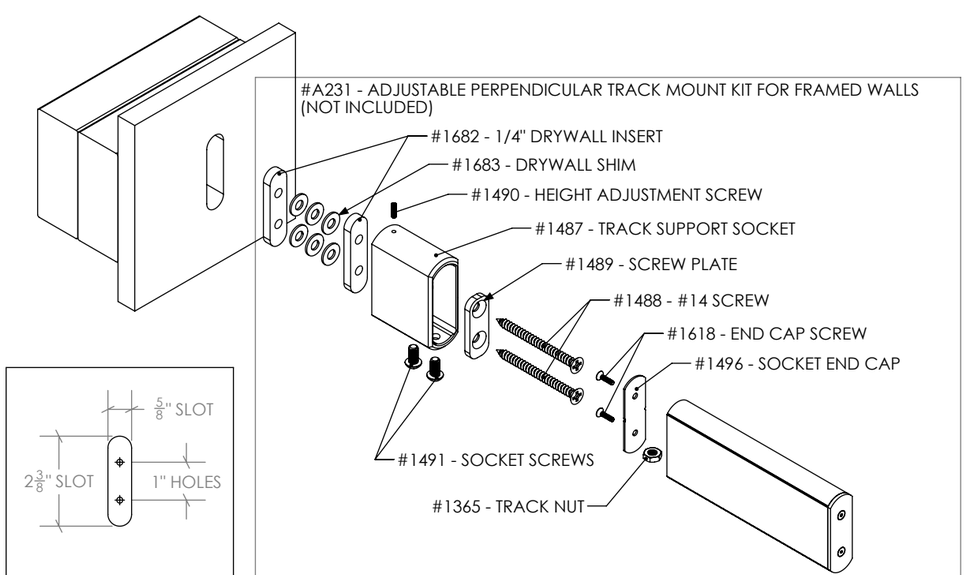

ALL INFORMATION CONTAINED IN THIS DOCUMENT IS THE PROPERTY OF KROWNLAB. ANY REPRODUCTION IN WHOLE OR IN PART IS PROHIBITED WITHOUT PRIOR WRITTEN CONSENT.
KROWNLAB AND THE KROWNLAB LOGO ARE REGISTERED TRADEMARKS OF KROWN LAB, INC.

DOCUMENT:	PRODUCT SPECIFICATIONS - GLASS WALL SPECIFICATIONS	DOOR APPLICATION:	SINGLE & BI-PARTING	DRAWING SCALE:	3/4" = 1'-0" (1:16)	KROWNLAB 2351 NW York St. Portland, OR 97210 +1 503 292 6998 www.krownlab.com support@krownlab.com
SYSTEM:	TRU-LEVEL™ TRACK	PANEL THICKNESS:	3/8" TO 1/2" (CONTACT US FOR PANELS OUTSIDE OF THIS RANGE)	UNITS:	INCHES	
MOUNTING STYLE:	GLASS WALL	MAXIMUM WEIGHT:	TROLLEY SYSTEM OR TRACK CONFIGURATION DEPENDENT	DATE:	5/17/2018	

THE KROWNLAB TRU-LEVEL™ TRACK SYSTEM IS COMPATIBLE WITH MONOLITHIC TEMPERED GLASS, 3/8" AND 1/2" IN THICKNESS. INQUIRE REGARDING THICKER GLASS.

GLASS PANELS MUST BE FLAT POLISHED AND HAVE A 1MM CHAMFER ON ALL EDGES.

ALL HOLES MUST BE DRILLED OR CNC MACHINED WITH STRAIGHT WALLS AND SEAMED EDGES. DO NOT WATER-JET - NO TAPERED HOLES.

KROWNLAB TRU-LEVEL™ TRACK IS NOT A STRUCTURAL MEMBER. SIDE-LITES AND TRANSOMS MUST BE ENGINEERED TO SUPPORT KROWNLAB HARDWARE.

ALL TEMPERED GLASS IS SUBJECT TO EXPERIENCE SPONTANIOUS BREAKAGE. IT IS THE BUYERS RESPONSIBILITY TO DETERMINE AND APPROVE GLASS SPECIFICATION(S) SUITABLE TO MEET ALL FACTORS RELEVANT TO THEIR PARTICULAR USE OR APPLICATION IN CONJUNCTION WITH ALL KROWN LAB, INC.'S PRODUCTS.

REFERENCE ASTM C1048, 7.9.5

TRACK HOLES DRILLED TO MATCH PATTERN ON GLASS WALL.

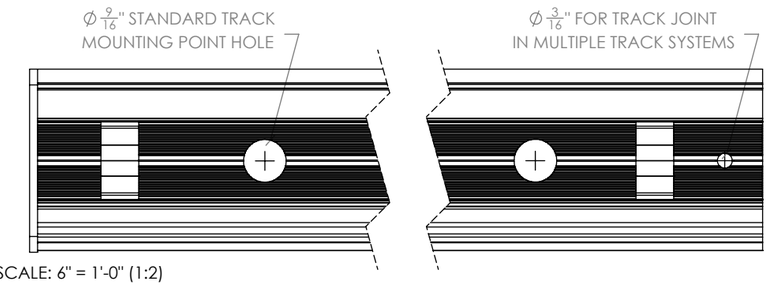

SCALE: 6" = 1'-0" (1:2)

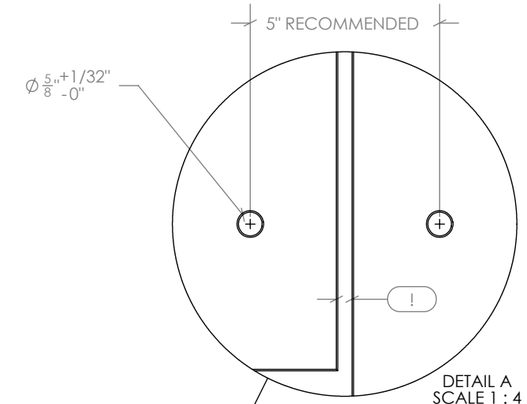

DETAIL A
SCALE 1 : 4

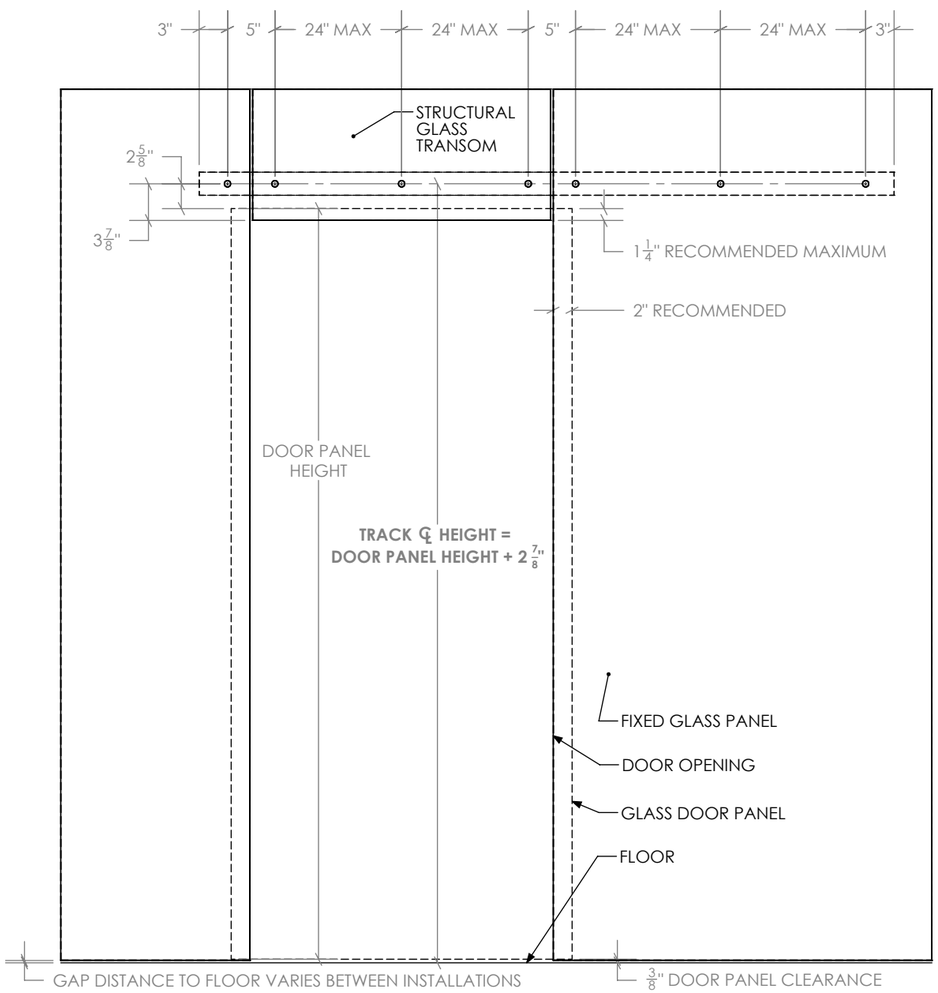

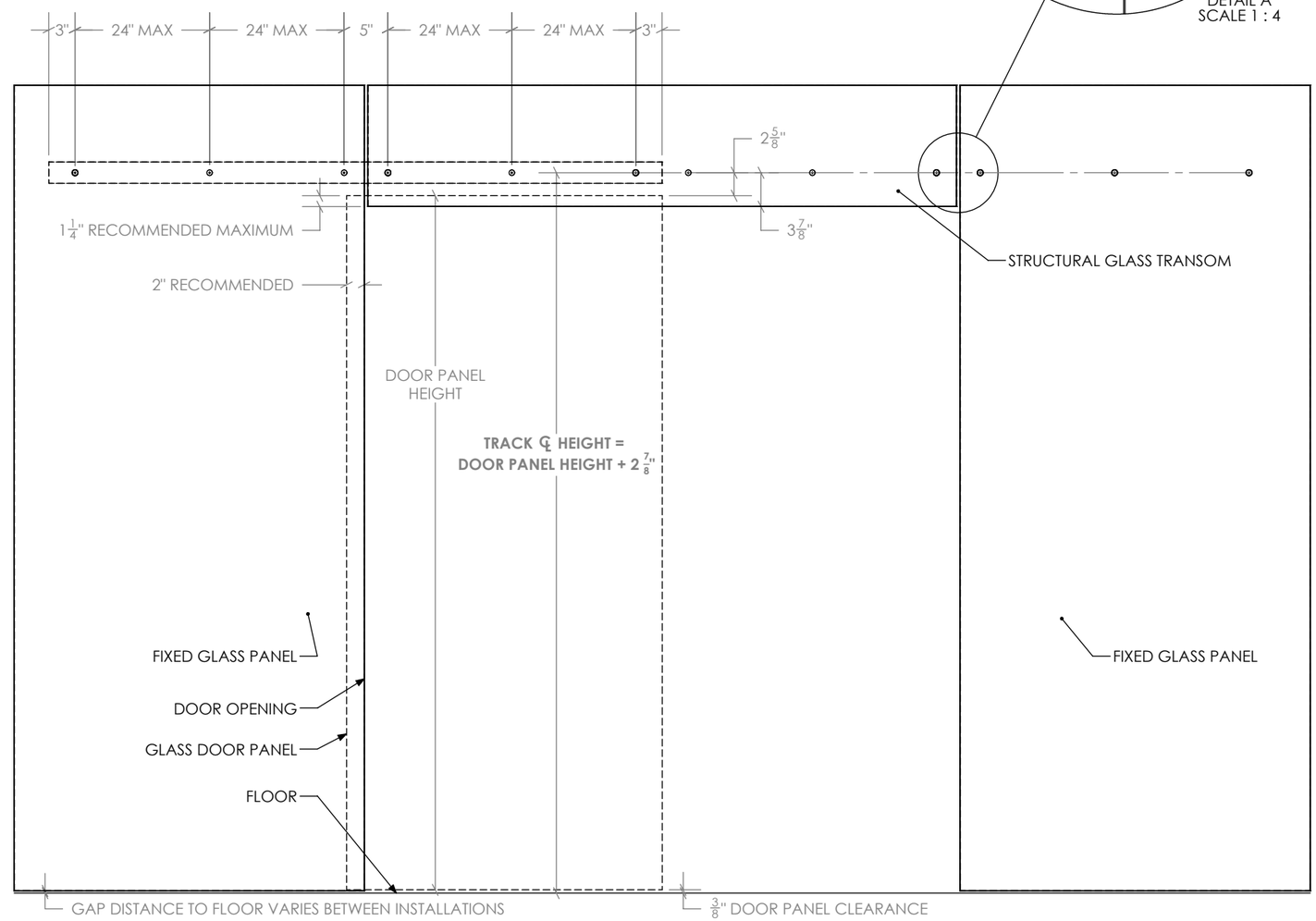

ALL INFORMATION CONTAINED IN THIS DOCUMENT IS THE PROPERTY OF KROWNLAB. ANY REPRODUCTION IN WHOLE OR IN PART IS PROHIBITED WITHOUT PRIOR WRITTEN CONSENT.
KROWNLAB AND THE KROWNLAB LOGO ARE REGISTERED TRADEMARKS OF KROWN LAB, INC.

DOCUMENT:	PRODUCT SPECIFICATIONS - PERPENDICULAR GLASS WALL SPECIFICATIONS	DOOR APPLICATION:	SINGLE & BI-PARTING	DRAWING SCALE:	3/4" = 1'-0" (1:16)	KROWNLAB 2351 NW York St. Portland, OR 97210 +1 503 292 6998 www.krownlab.com support@krownlab.com
SYSTEM:	TRU-LEVEL™ TRACK	PANEL THICKNESS:	3/8" TO 1/2" (CONTACT US FOR PANELS OUTSIDE OF THIS RANGE)	UNITS:	INCHES	KROWNLAB PDX - ORE
MOUNTING STYLE:	GLASS WALL	MAXIMUM WEIGHT:	TROLLEY SYSTEM OR TRACK CONFIGURATION DEPENDENT	DATE:	11/9/2018	

THE KROWNLAB TRU-LEVEL™ TRACK SYSTEM IS COMPATIBLE WITH MONOLITHIC TEMPERED GLASS, 3/8" AND 1/2" IN THICKNESS. INQUIRE REGARDING THICKER GLASS.

GLASS PANELS MUST BE FLAT POLISHED AND HAVE A 1MM CHAMFER ON ALL EDGES.

ALL HOLES MUST BE DRILLED OR CNC MACHINED WITH STRAIGHT WALLS AND SEAMED EDGES. DO NOT WATER-JET - NO TAPERED HOLES.

KROWNLAB TRU-LEVEL™ TRACK IS NOT A STRUCTURAL MEMBER. SIDE-LITES AND TRANSOMS MUST BE ENGINEERED TO SUPPORT KROWNLAB HARDWARE.

ALL TEMPERED GLASS IS SUBJECT TO EXPERIENCE SPONTANIOUS BREAKAGE. IT IS THE BUYERS RESPONSIBILITY TO DETERMINE AND APPROVE GLASS SPECIFICATION(S) SUITABLE TO MEET ALL FACTORS RELEVANT TO THEIR PARTICULAR USE OR APPLICATION IN CONJUNCTION WITH ALL KROWN LAB, INC.'S PRODUCTS.

REFERENCE ASTM C1048, 7.9.5

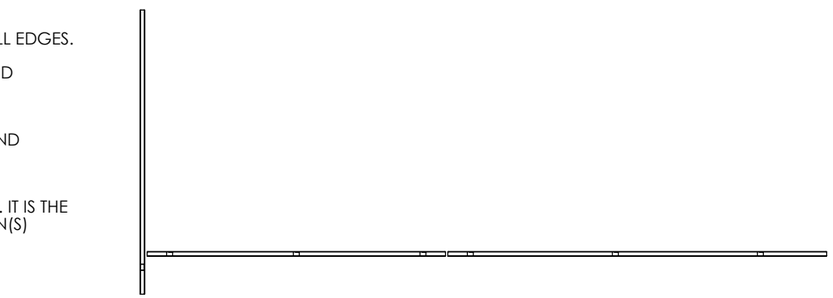

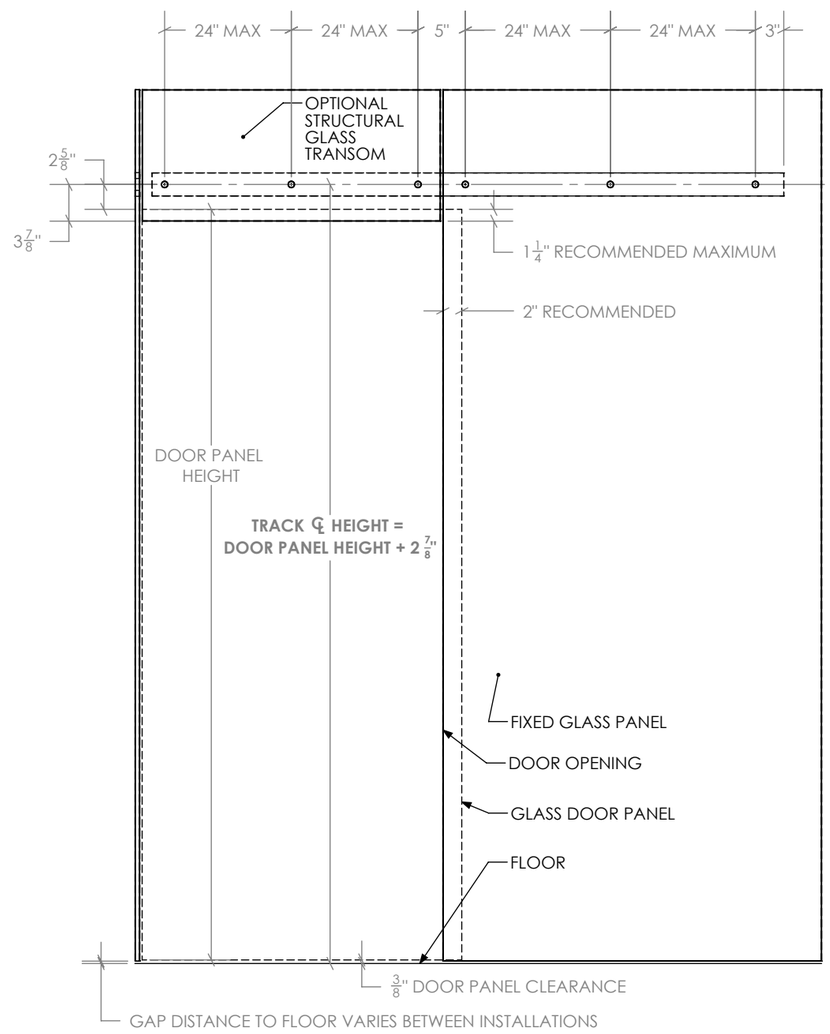

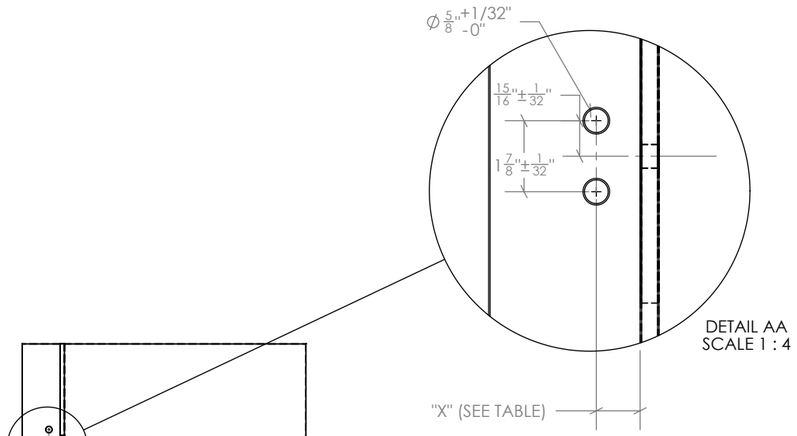

DESIRED PANEL CLEARANCE	"X" PERP. WALL HOLE LOCATION
1/2"	29/32"
1"	1-13/32"
1-1/4"	1-21/32"

ALL INFORMATION CONTAINED IN THIS DOCUMENT IS THE PROPERTY OF KROWNLAB. ANY REPRODUCTION IN WHOLE OR IN PART IS PROHIBITED WITHOUT PRIOR WRITTEN CONSENT.
KROWNLAB AND THE KROWNLAB LOGO ARE REGISTERED TRADEMARKS OF KROWN LAB, INC.

DOCUMENT:	PRODUCT SPECIFICATIONS - GLASS DOOR PANEL SPECIFICATIONS	DOOR APPLICATION:	SINGLE & BI-PARTING	DRAWING SCALE:	1" = 1'-0" (1:12)	KROWNLAB 2351 NW York St. Portland, OR 97210 +1 503 292 6998 www.krownlab.com support@krownlab.com
SYSTEM:	TRU-LEVEL™ TRACK	PANEL THICKNESS:	3/8" TO 1/2" (CONTACT US FOR PANELS OUTSIDE OF THIS RANGE)	UNITS:	INCHES	
MOUNTING STYLE:	GLASS WALL	MAXIMUM WEIGHT:	TROLLEY SYSTEM OR TRACK CONFIGURATION DEPENDENT	DATE:	5/17/2018	

GLASS PANELS MUST BE FLAT POLISHED AND HAVE A 1MM CHAMFER ON ALL EDGES.

ALL HOLES MUST BE DRILLED OR CNC MACHINED WITH STRAIGHT WALLS AND SEAMED EDGES. DO NOT WATER-JET - NO TAPERED HOLES.

ALL TEMPERED GLASS IS SUBJECT TO EXPERIENCE SPONTANIOUS BREAKAGE. IT IS THE BUYERS RESPONSIBILITY TO DETERMINE AND APPROVE GLASS SPECIFICATION(S) SUITABLE TO MEET ALL FACTORS RELEVANT TO THEIR PARTICULAR USE OR APPLICATION IN CONJUNCTION WITH ALL KROWN LAB, INC.'S PRODUCTS.

REFERENCE ASTM C1048, 7.9.5

TROLLEY ATTACHMENT POINTS: LOKI TROLLEYS ONLY

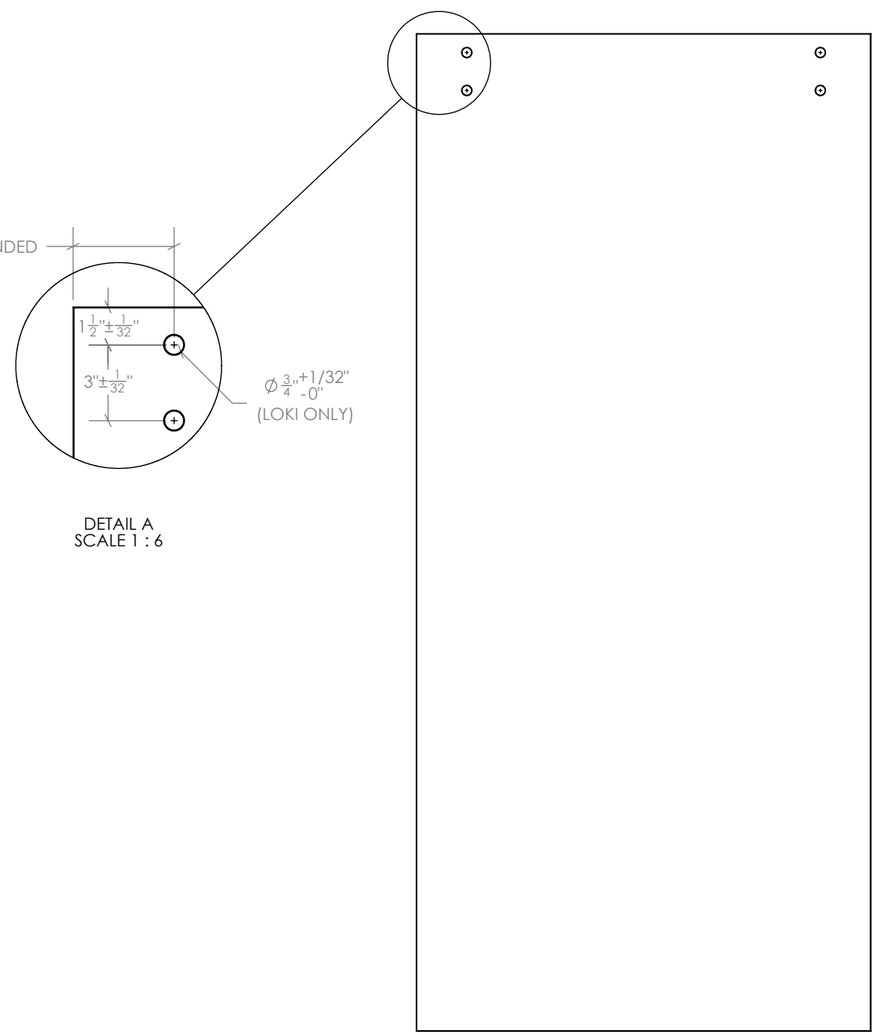

DETAIL A
SCALE 1 : 6

TROLLEY ATTACHMENT POINTS: ODEN AND BALDUR TROLLEYS ONLY

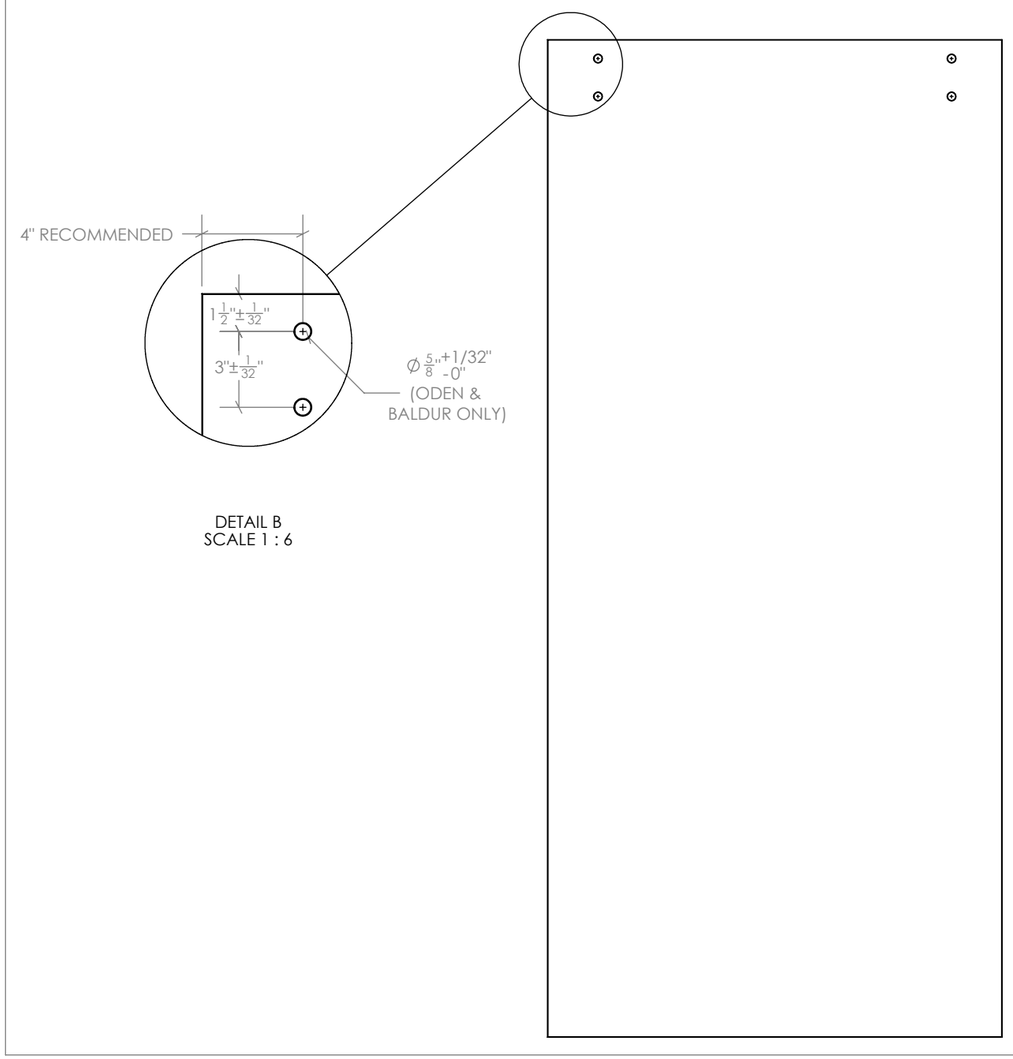

DETAIL B
SCALE 1 : 6

ALL INFORMATION CONTAINED IN THIS DOCUMENT IS THE PROPERTY OF KROWNLAB. ANY REPRODUCTION IN WHOLE OR IN PART IS PROHIBITED WITHOUT PRIOR WRITTEN CONSENT.
KROWNLAB AND THE KROWNLAB LOGO ARE REGISTERED TRADEMARKS OF KROWN LAB, INC.