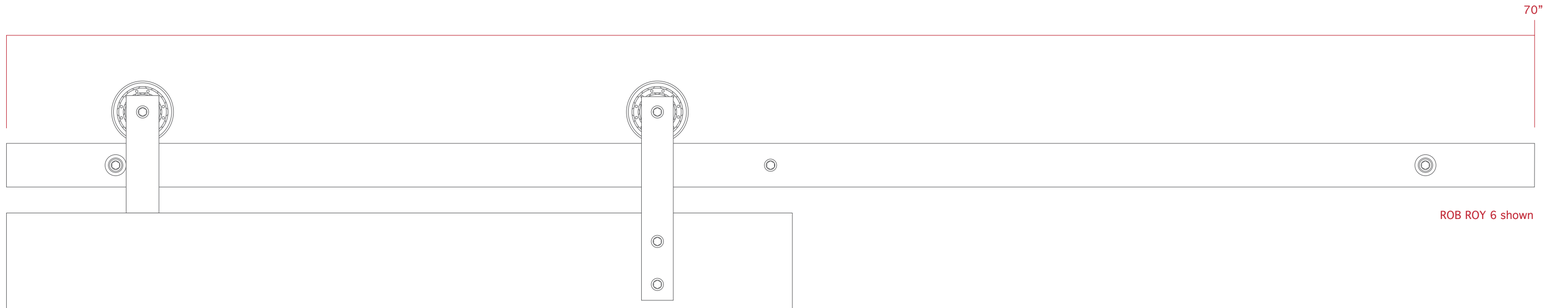

ROB ROY 6 shown

ROB ROY Top Mount:

Compatible with panels 1-3/8" to 3" in thickness.

Shown here mounted through 1/2" drywall, into double 2x4 blocking between studs.

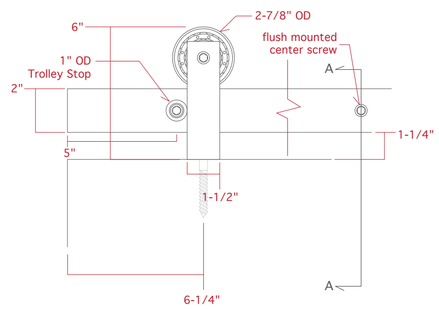

ROB ROY Face Mount:

Compatible with door panels 3/4" to 1-3/4" in thickness without base moldings or base board.

Shown here mounted through 1/2" drywall, into double 2x4 blocking between studs.

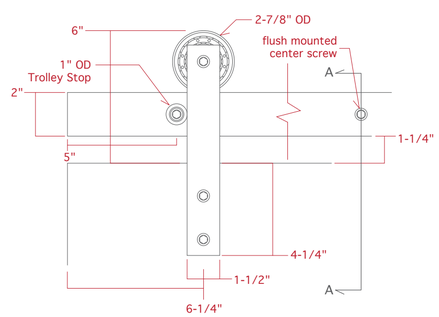

ROB ROY Glass:

Compatible with door panels 3/8" to 3/4" in thickness.

Shown here mounted through 1/2" drywall, into double 2x4 blocking between studs.

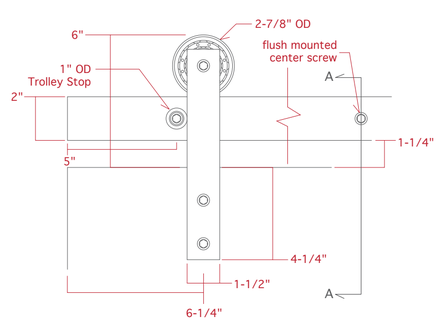

Section AA

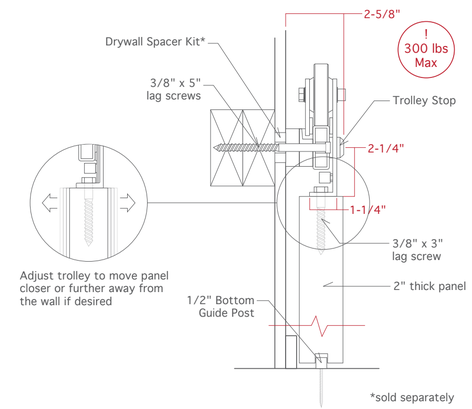

Section AA

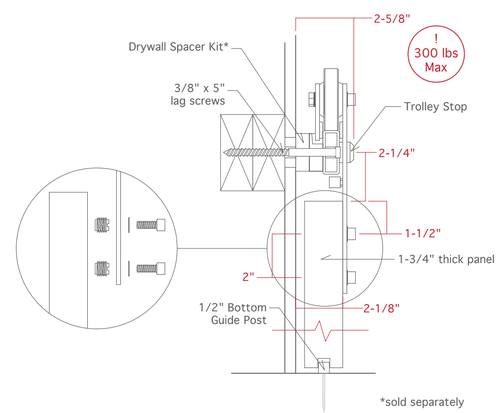

Section AA

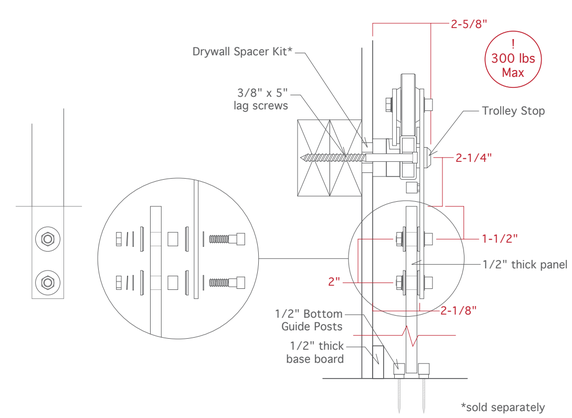

Product: ROB ROY
Date: April 30th 2012
FOR SPECIFICATION PURPOSES ONLY
PROPERTY OF KROWN LAB INC.