SPEC SHEET

PRODUCT NAME: RAGNAR & ODEN MOUNTING STYLE: GLASS MOUNT ON GLASS WALL

DRAWING SCALE: 3/4" = 1'-0" (1:16) PAGE: 1/2 DATE: 9/14/2016

Krownlab, Inc.
2351 NW York St.
Portland, OR 97210
503-292-6998
www.krownlab.com
support@krownlab.com

KROWNLAB
PDX - ORE

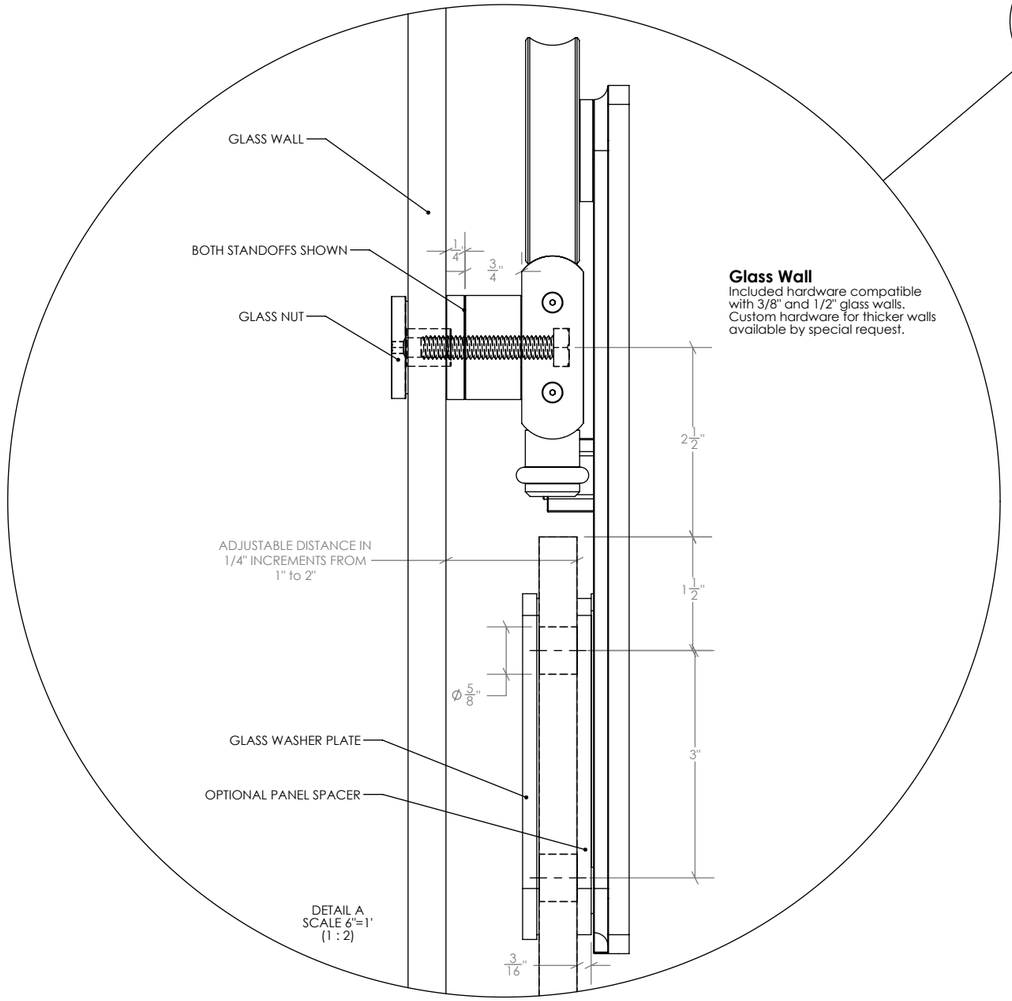

Glass Wall
Included hardware compatible with 3/8" and 1/2" glass walls. Custom hardware for thicker walls available by special request.

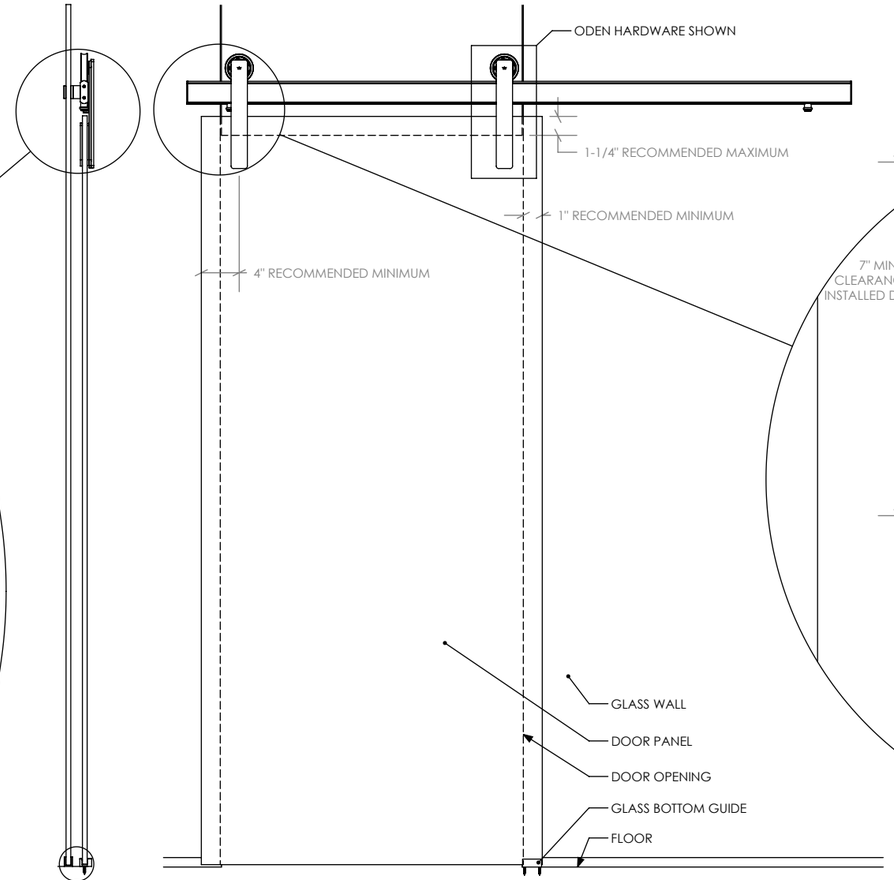

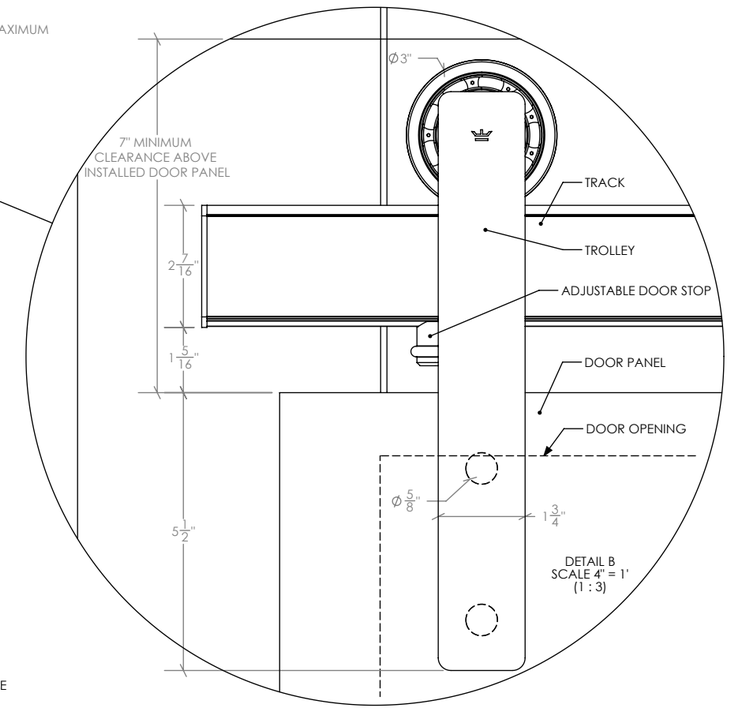

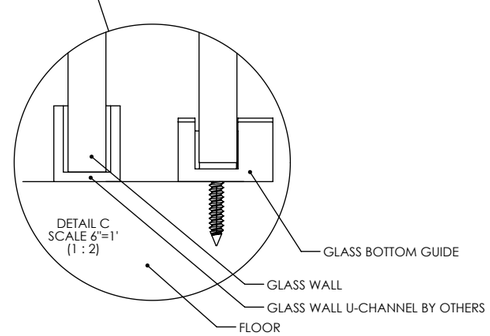

Product Features & Technical Specifications

- Industry leading 10 year warranty
- ADA compliant pull force at full system loading
- Supports panels weighing up to 400 lbs in all configurations
- Tru-Leveling System for faster, perfect installations
  - Built-in 1/4" adjustment in all directions at each track mounting point
- Vertical panel adjustment
  - Adjust panel up to ¼" even after installation
- Fully adjustable door stops
  - Allows for fast and easy control of door travel during installation and after
- Available in Brushed Stainless and Black Stainless finishes
- Compatible with 3/8" and 1/2" glass walls
  - Custom hardware for thicker panels available by special request
  - Perpendicular wall fitting accessory available
- Track available up to 13 ft in length:
  - Pre-cut to length in 1 ft increments, un-drilled
  - Pre-cut to length in 1 ft increments, pre-drilled with standard hole pattern
  - Made-to-measure, cut and drilled to your specifications
- Connect multiple tracks with nearly-seamless track connector
- Easily cut and drill track in the field with commonly available tools
- For glass panels 3/8" to 3/4" in thickness
- Comprehensive line of system add-ons at www.krownlab.com
- Full CAD available at www.krownlab.com/downloads

ALL INFORMATION CONTAINED IN THIS DOCUMENT IS THE PROPERTY OF KROWNLAB. ANY REPRODUCTION IN WHOLE OR IN PART IS PROHIBITED WITHOUT PRIOR WRITTEN CONSENT. KROWNLAB AND THE KROWNLAB LOGO ARE REGISTERED TRADEMARKS OF KROWN LAB, INC.

SPEC SHEET

PRODUCT NAME: RAGNAR

TRACK SPECIFICATION: STOCK TRACK LENGTHS PREDRILLED

DRAWING SCALE: 3/4" = 1'-0" (1:12) PAGE: 2/2 DATE: 9/14/2016

NOTES: Also available undrilled and made-to-measure

Krownlab, Inc.
2351 NW York St.
Portland, OR 97210
503-292-6998
www.krownlab.com
support@krownlab.com

KROWNLAB
PDX - ORE

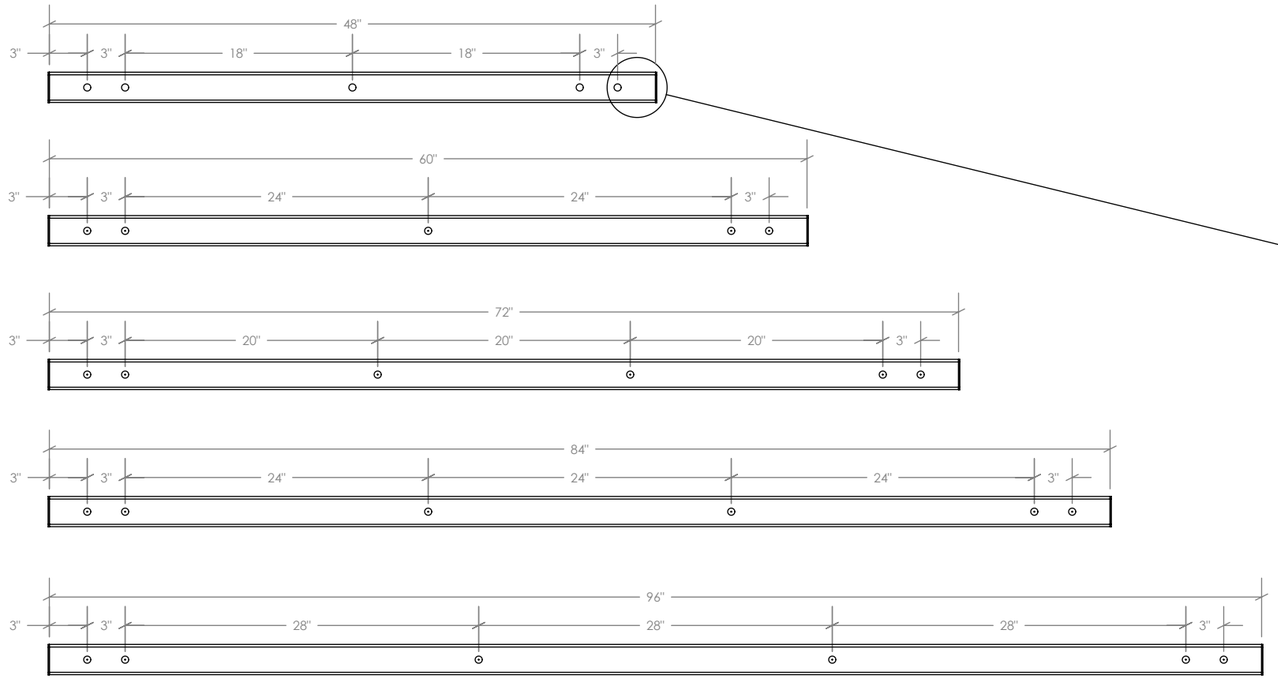

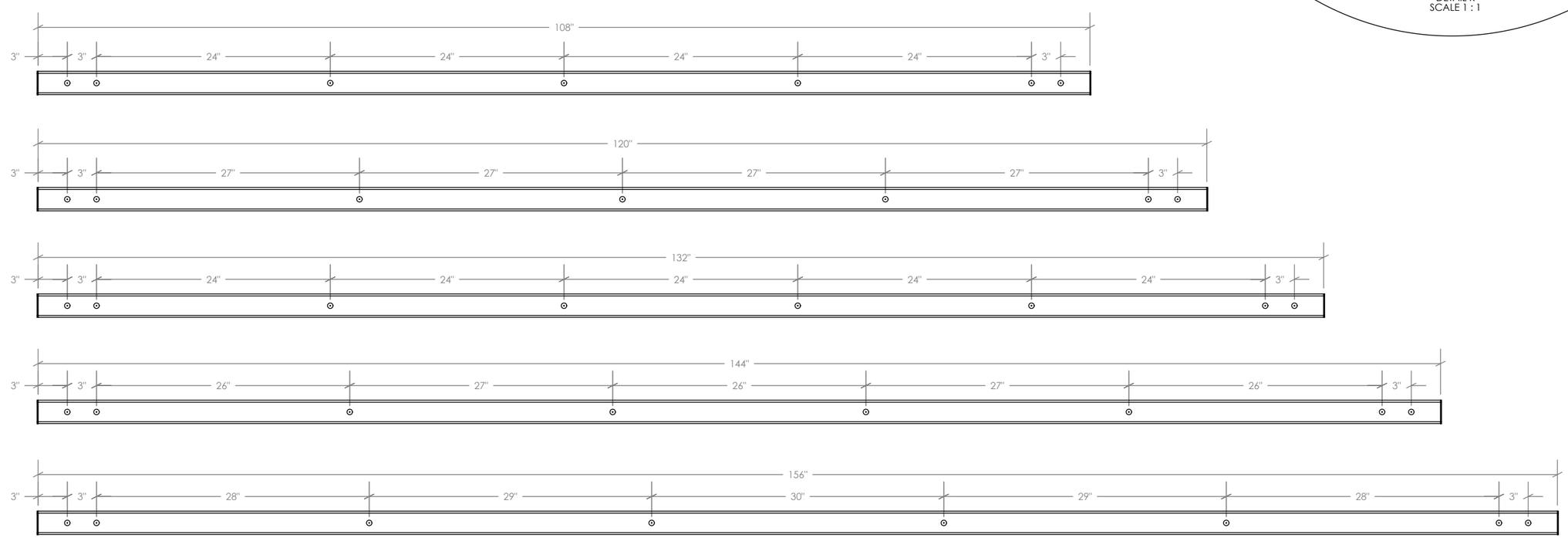

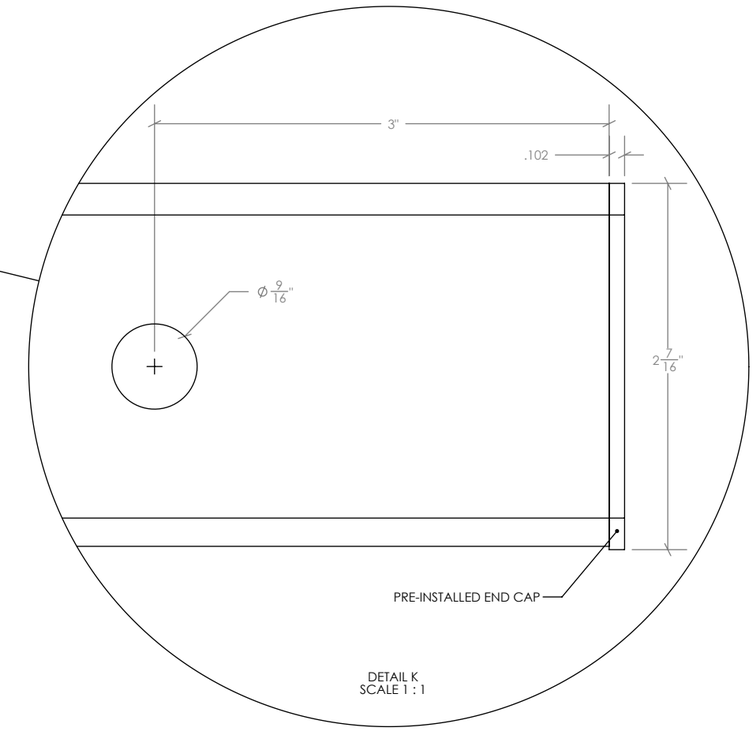

DETAIL K
SCALE 1 : 1

ALL INFORMATION CONTAINED IN THIS DOCUMENT IS THE PROPERTY OF KROWNLAB. ANY REPRODUCTION IN WHOLE OR IN PART IS PROHIBITED WITHOUT PRIOR WRITTEN CONSENT. KROWNLAB AND THE KROWNLAB LOGO ARE REGISTERED TRADEMARKS OF KROWN LAB, INC.