SPEC SHEET

PRODUCT NAME: RAGNAR & ODEN MOUNTING STYLE: TOP MOUNT

DRAWING SCALE: 3/4" = 1'-0" (1:16) PAGE: 1/1 DATE: 5/18/2016

Krownlab, Inc.
2351 NW York St.
Portland, OR 97210
503-292-6998
www.krownlab.com
support@krownlab.com

KROWNLAB
FOX - OKE

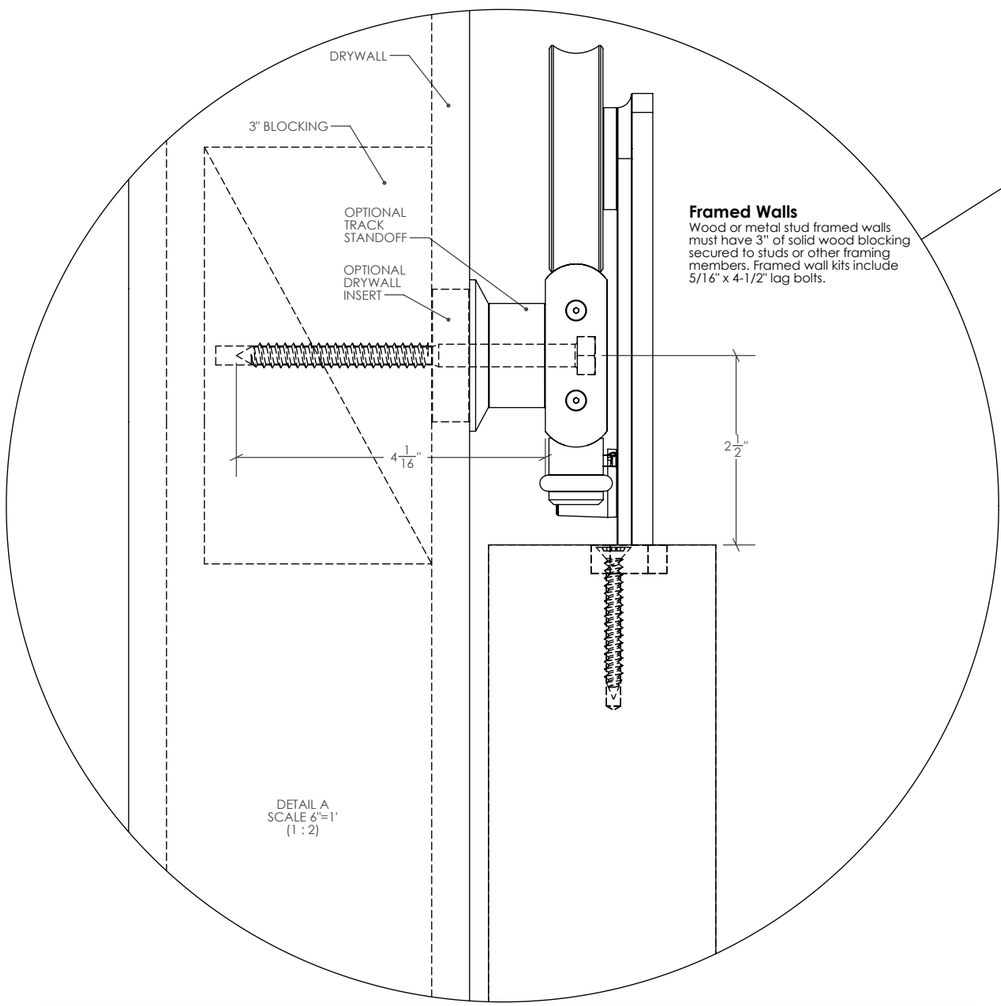

Framed Walls
Wood or metal stud framed walls must have 3" of solid wood blocking secured to studs or other framing members. Framed wall kits include 5/16" x 4-1/2" lag bolts.

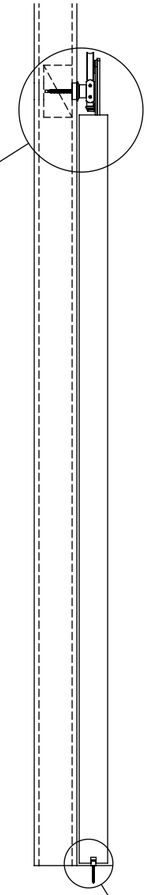

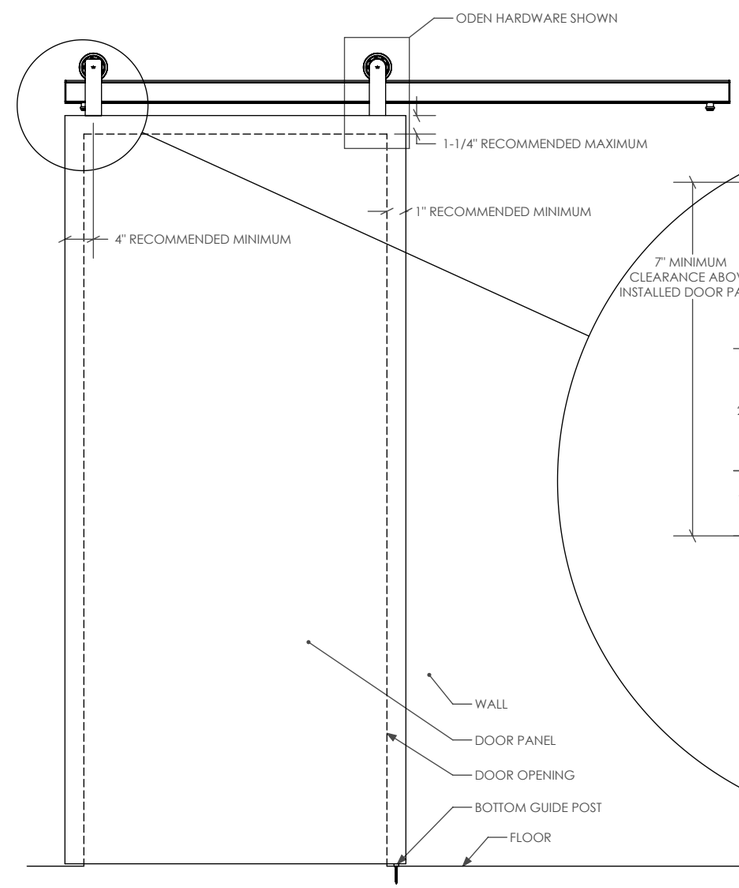

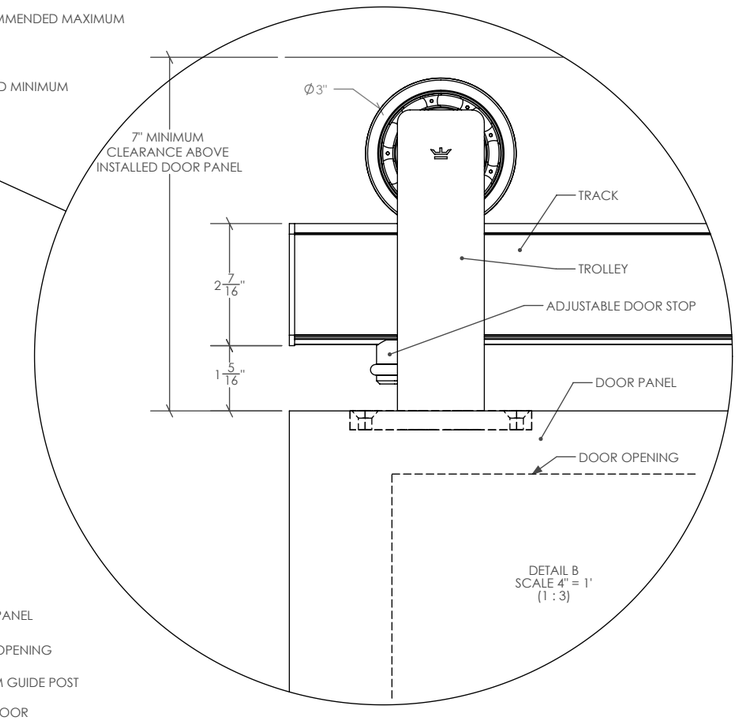

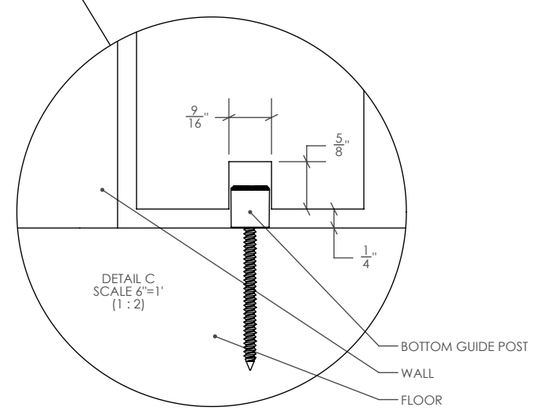

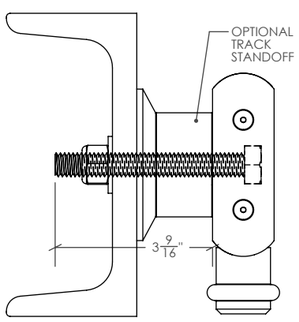

Steel Beams
Steel beams must be structural in nature and have a minimum wall thickness of ¼". Note that you cannot attach this hardware to sheet metal studs. Steel kits include 5/16"-18 x 4" bolts.

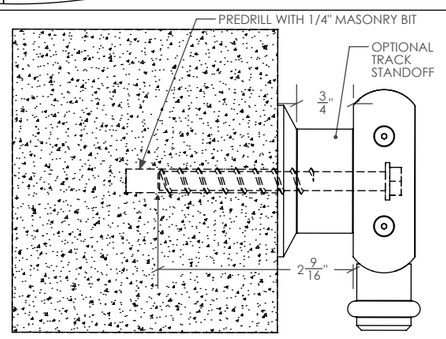

Concrete Walls
Concrete and masonry walls must be solid and thicker than the minimum required thread engagement of 1-1/2". Concrete kits include 5/16" x 3" screw-in anchors.

SCALE 6"=1'
(1 : 2)

Product Features & Technical Specifications

- Industry leading 10 year warranty
- ADA compliant pull force at full system loading
- Supports panels weighing up to 400 lbs in all configurations
- Tru-Leveling System™ for faster, perfect installations
  - Built-in 1/4" adjustment in all directions at each track mounting point
- Adjust wall-to-track distance from 1/4" to 1"
  - Shim kits available for further adjustment and uneven walls
- Fully adjustable door stops
  - Allows for fast and easy control of door travel during and after installation and after
- Available in Brushed Stainless and Black Stainless finishes
- Compatible with framed walls, concrete walls, metal beams, and glass walls
- Compatible with framed walls, concrete walls, metal beams, and glass walls
  - Perpendicular wall fitting accessory available
- Track available up to 13 ft in length:
  - Pre-cut to length in 1 ft increments, un-drilled
  - Pre-cut to length in 1 ft increments, pre-drilled with standard hole pattern
  - Made-to-measure, cut and drilled to your specifications
- Seamlessly connect multiple tracks with track connector
- Easily cut and drill track in the field with commonly available tools
- For door panels at least 1-3/8" thick
- Adjustable wall to door panel clearance by up to 1-3/8"
- Comprehensive line of system add-ons at www.krownlab.com
- Full CAD available at www.krownlab.com/downloads

ALL INFORMATION CONTAINED IN THIS DOCUMENT IS THE PROPERTY OF KROWNLAB. ANY REPRODUCTION IN WHOLE OR IN PART IS PROHIBITED WITHOUT PRIOR WRITTEN CONSENT. KROWNLAB AND THE KROWNLAB LOGO ARE REGISTERED TRADEMARKS OF KROWN LAB, INC.

SPEC SHEET

PRODUCT NAME: RAGNAR

TRACK SPECIFICATION: STOCK TRACK LENGTHS PREDRILLED

DRAWING SCALE: 3/4" = 1'-0" (1:12) PAGE: 1/1 DATE: 12/9/2015

NOTES: Also available undrilled and made-to-measure

Krownlab, Inc.
2351 NW York St.
Portland, OR 97210
503-292-6998
www.krownlab.com
support@krownlab.com

KROWNLAB
PDX - OKC

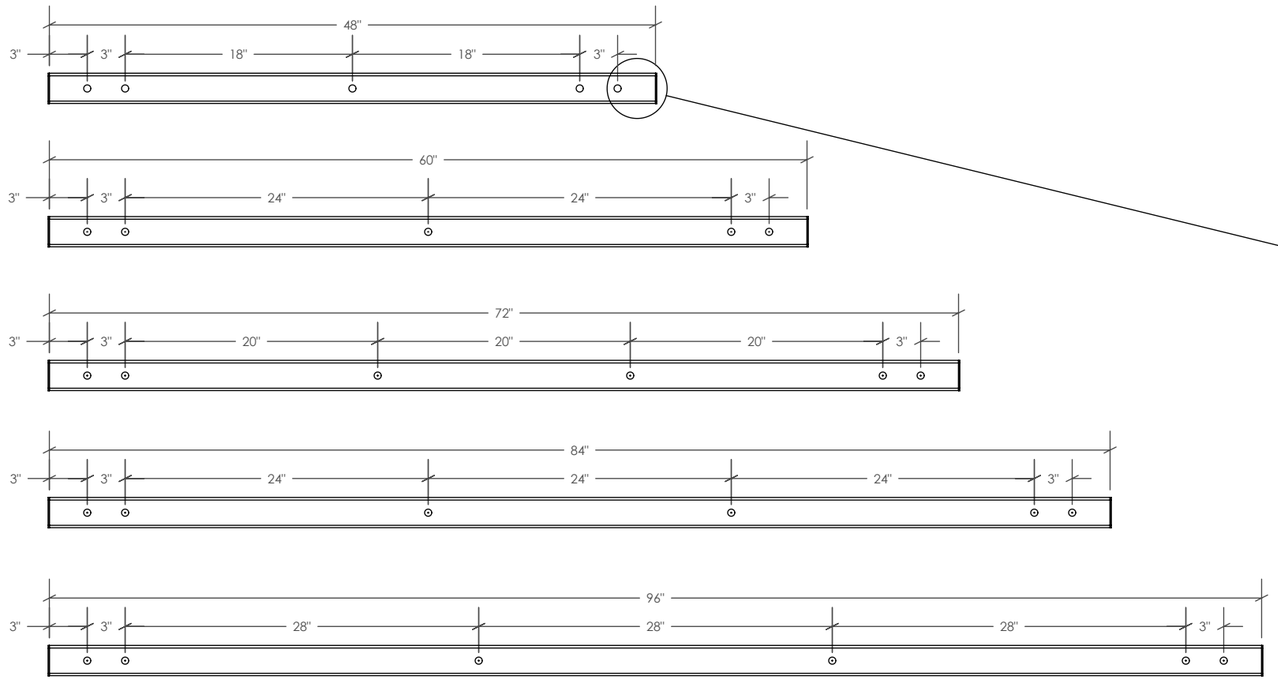

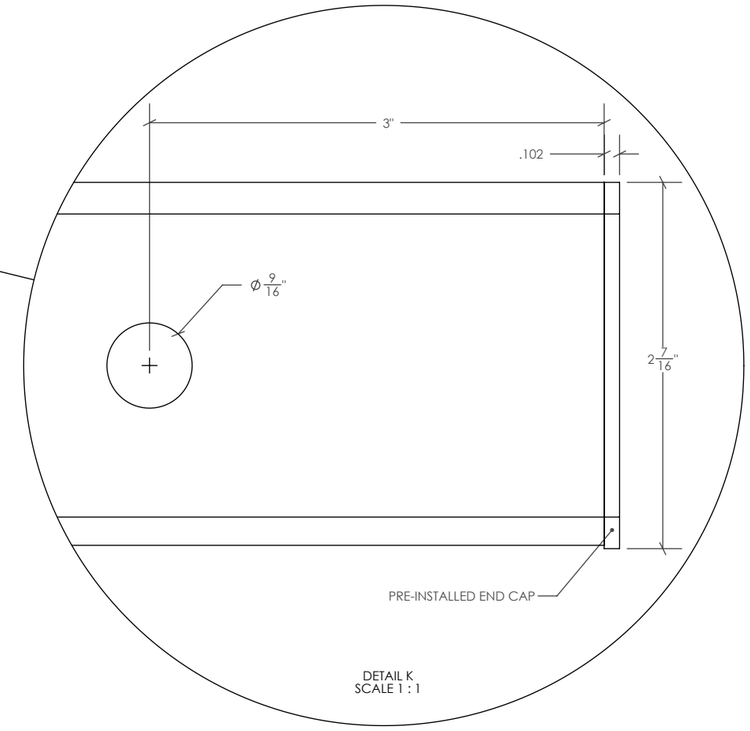

DETAIL K
SCALE 1 : 1

ALL INFORMATION CONTAINED IN THIS DOCUMENT IS THE PROPERTY OF KROWNLAB. ANY REPRODUCTION IN WHOLE OR IN PART IS PROHIBITED WITHOUT PRIOR WRITTEN CONSENT. KROWNLAB AND THE KROWNLAB LOGO ARE REGISTERED TRADEMARKS OF KROWN LAB, INC.