KROWNLAB

PDX - ORE

Sliding Door Hardware
Installation Instructions
Rob Roy

INSTALLATION INSTRUCTIONS

KROWNLAB

Structural Information

For standard systems and most custom single door opening systems.

General Overview

- All Krown Lab sliding barn door hardware systems require the provided track fasteners be properly engaged in 3" of structural material. The wall or structure where your system will be mounted must be designed to support the weight specified for the system. See chart below.

System	Panel weight limit
Rob Roy	150 lbs

- Ensure that door panels are constructed with solid, structural material at the location of trolley attachments, bottom guide, and door pull(s) if used.
- Check with your contractor and/or local listings to confirm accordance with local building codes.
- For best results, and to ensure full compliance with local building codes and standards, seek qualified building professionals with a comprehensive understanding of relevant material properties and full building and site conditions.
- Refer to our Product Guide for product technical drawings and material care. Please review our Terms and Conditions before installing.

© 2015 Krownlab. All rights reserved.

SYSTEM HARDWARE

KROWNLAB

For standard systems and most custom single door opening systems.

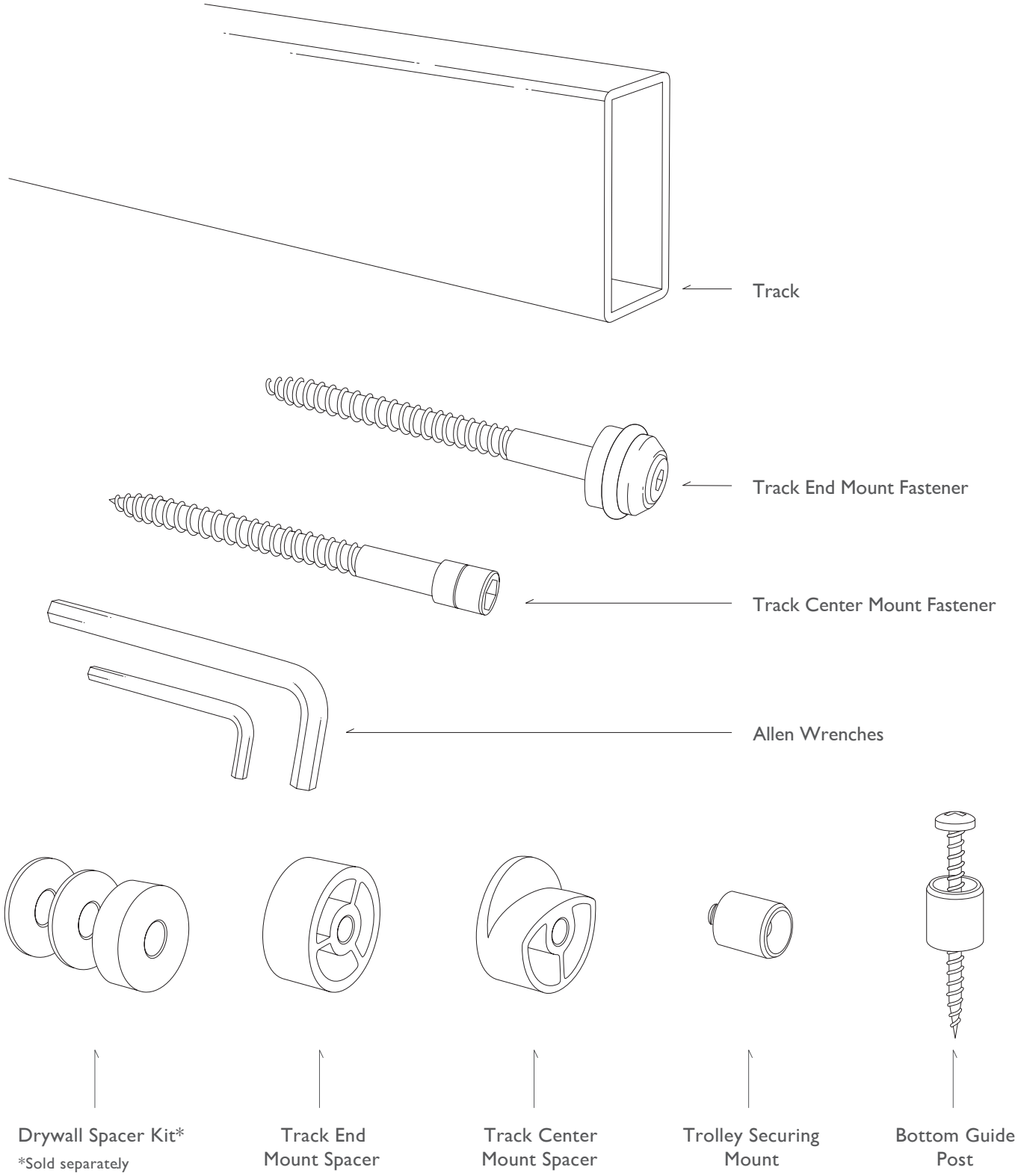

© 2015 Krownlab. All rights reserved.

TRACK INSTALLATION

KROWNLAB

Determine track height

For standard systems and most custom single door opening systems.

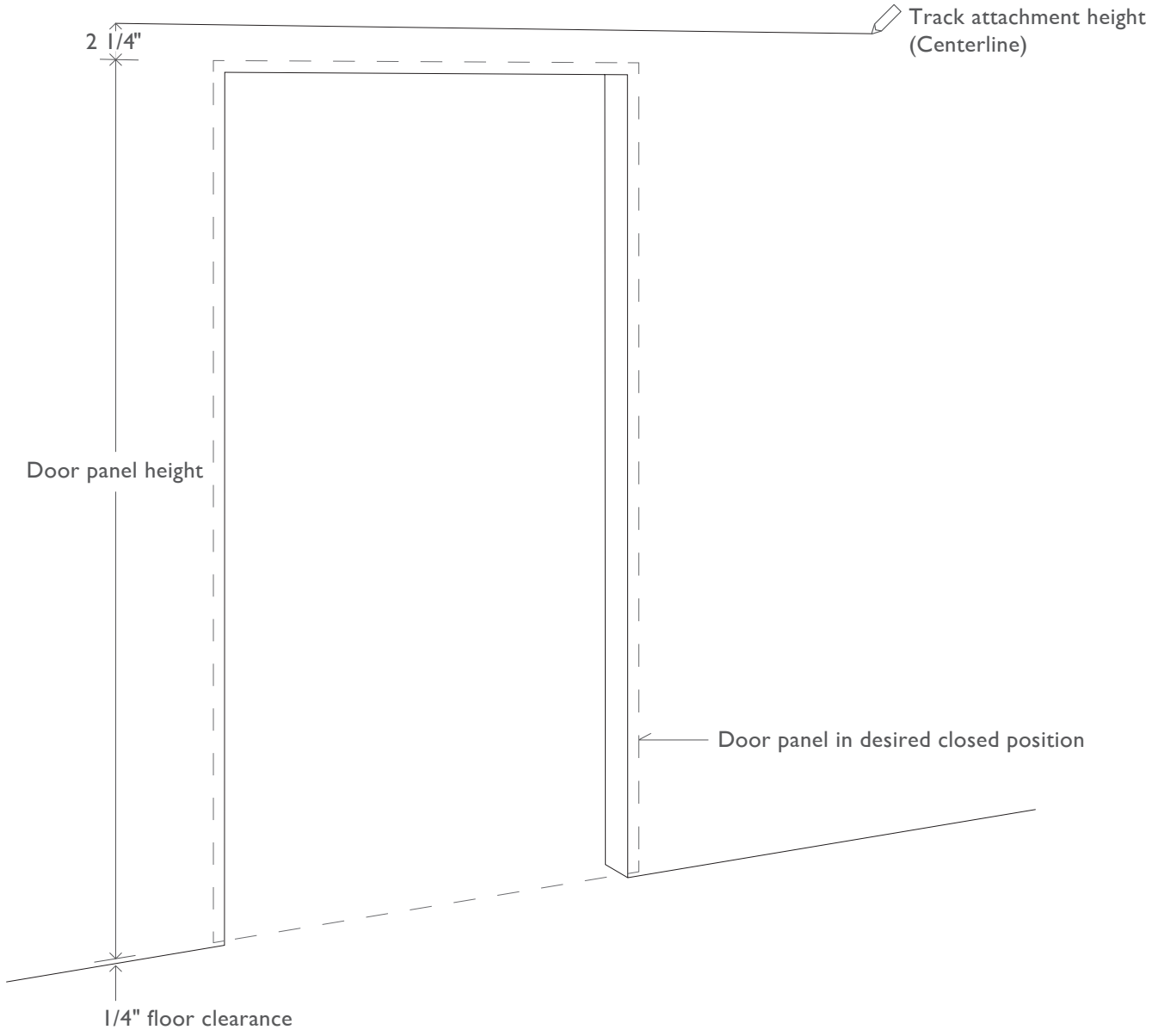

Track attachment height = door panel height + 2-1/2"*

*If using Bottom Guide Track, add 5/8" to 3/4" to this dimension depending on your specific product.

① Measure and mark the height of your track attachments using the equation above.

© 2015 Krownlab. All rights reserved.

TRACK INSTALLATION

KROWNLAB

Locate attachment points

Standard 70" track shown below.

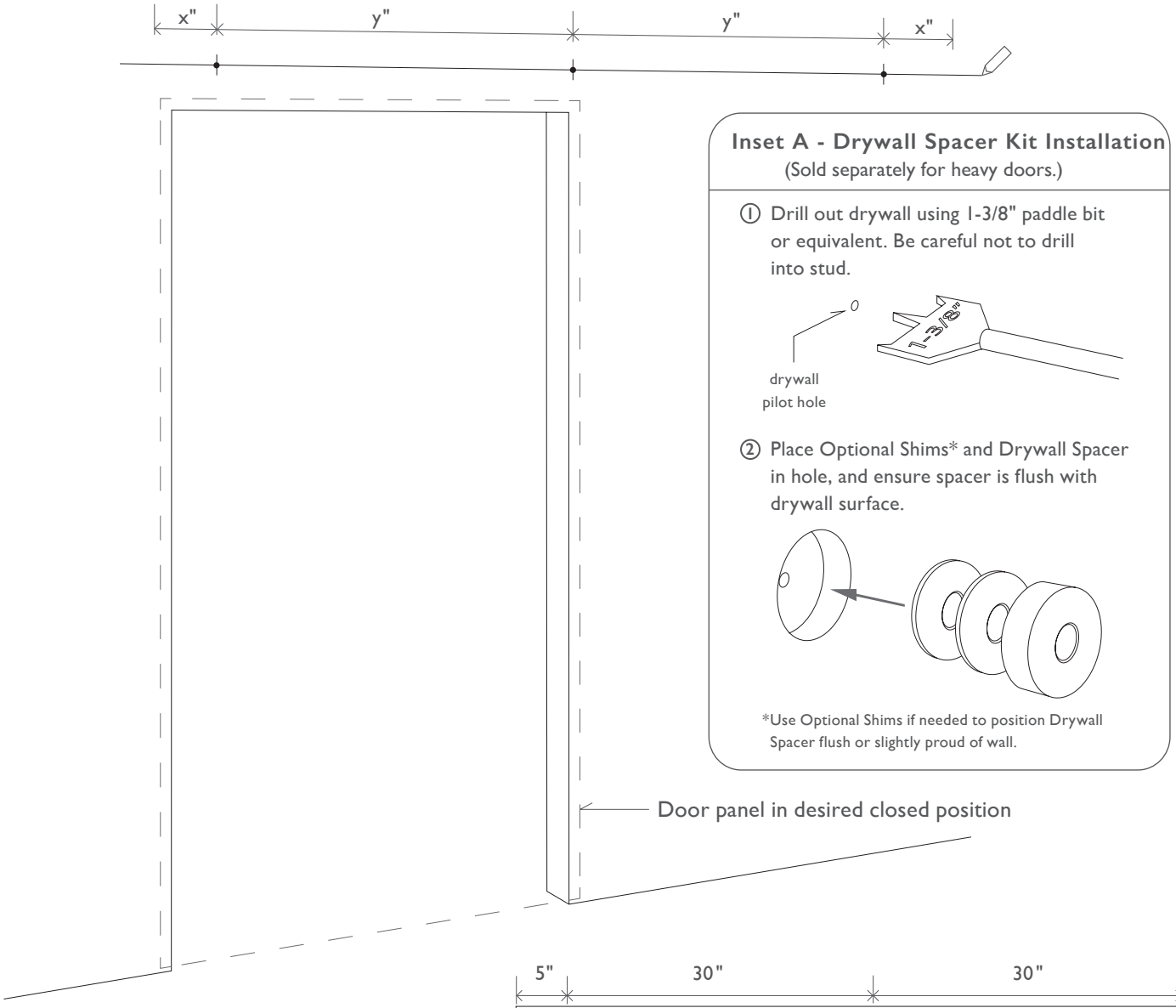

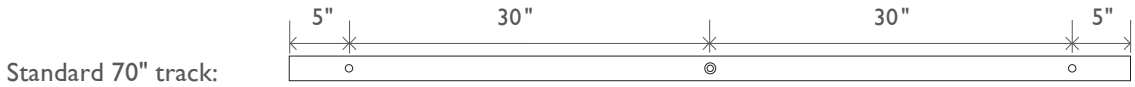

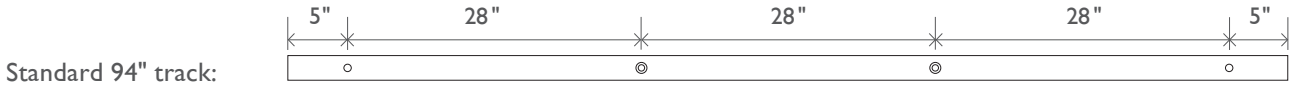

① Measure and mark locations for all track attachment points, referencing the applicable track drawings above. For custom length tracks reference your approved custom drawing.

② Drill small pilot hole in marked locations.

③ If installing Drywall Spacer Kits reference Inset A.

④ Drill full size pilot holes for track fasteners in pre-drilled locations.

© 2015 Krownlab. All rights reserved.

TRACK INSTALLATION

KROWNLAB

Mount track to wall

① Install both End Mounts

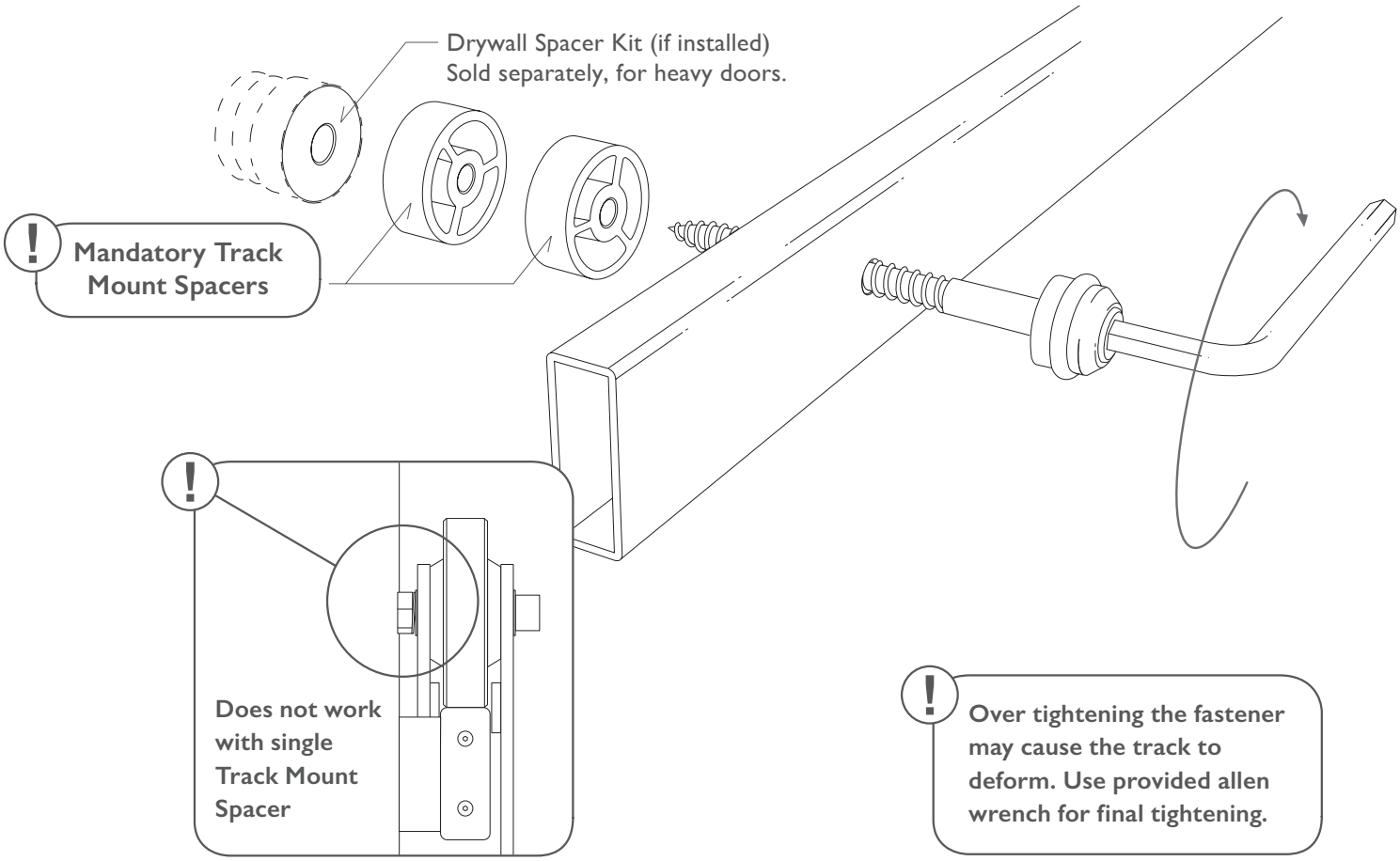

② Install Center Mount(s)

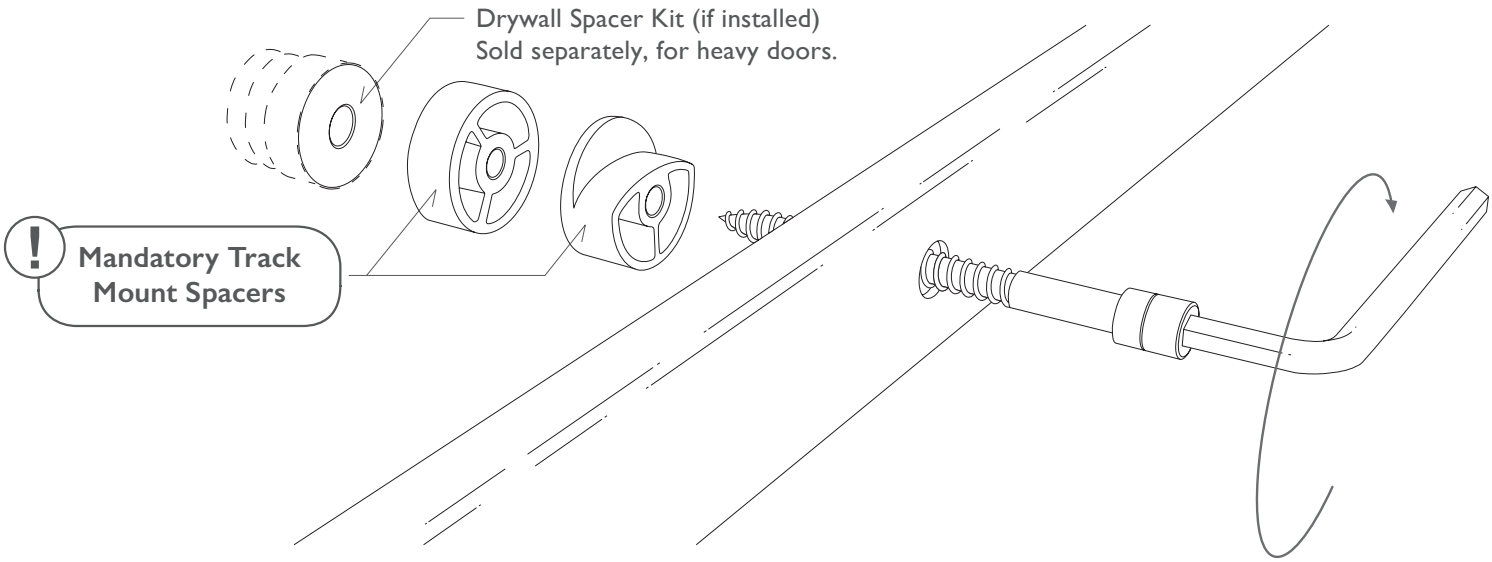

© 2015 Krownlab. All rights reserved.

TRACK INSTALLATION

KROWNLAB

Finish track installation

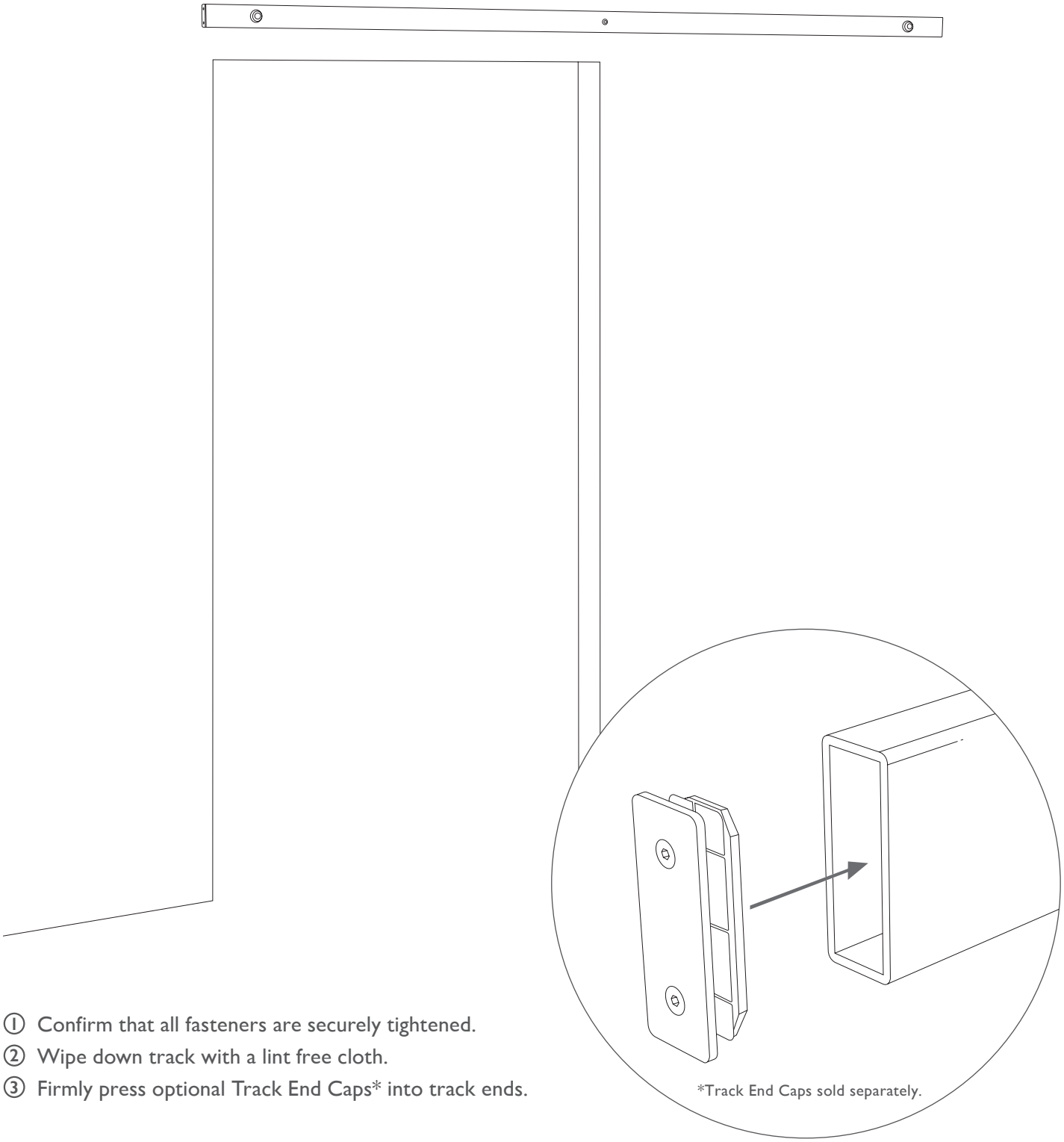

① Confirm that all fasteners are securely tightened.
② Wipe down track with a lint free cloth.
③ Firmly press optional Track End Caps* into track ends.

© 2015 Krownlab. All rights reserved.

WOOD PANEL SPECIFICATIONS

KROWNLAB

Drill hole locations

For standard systems and most custom single door opening systems.

► For Glass panels see page 14

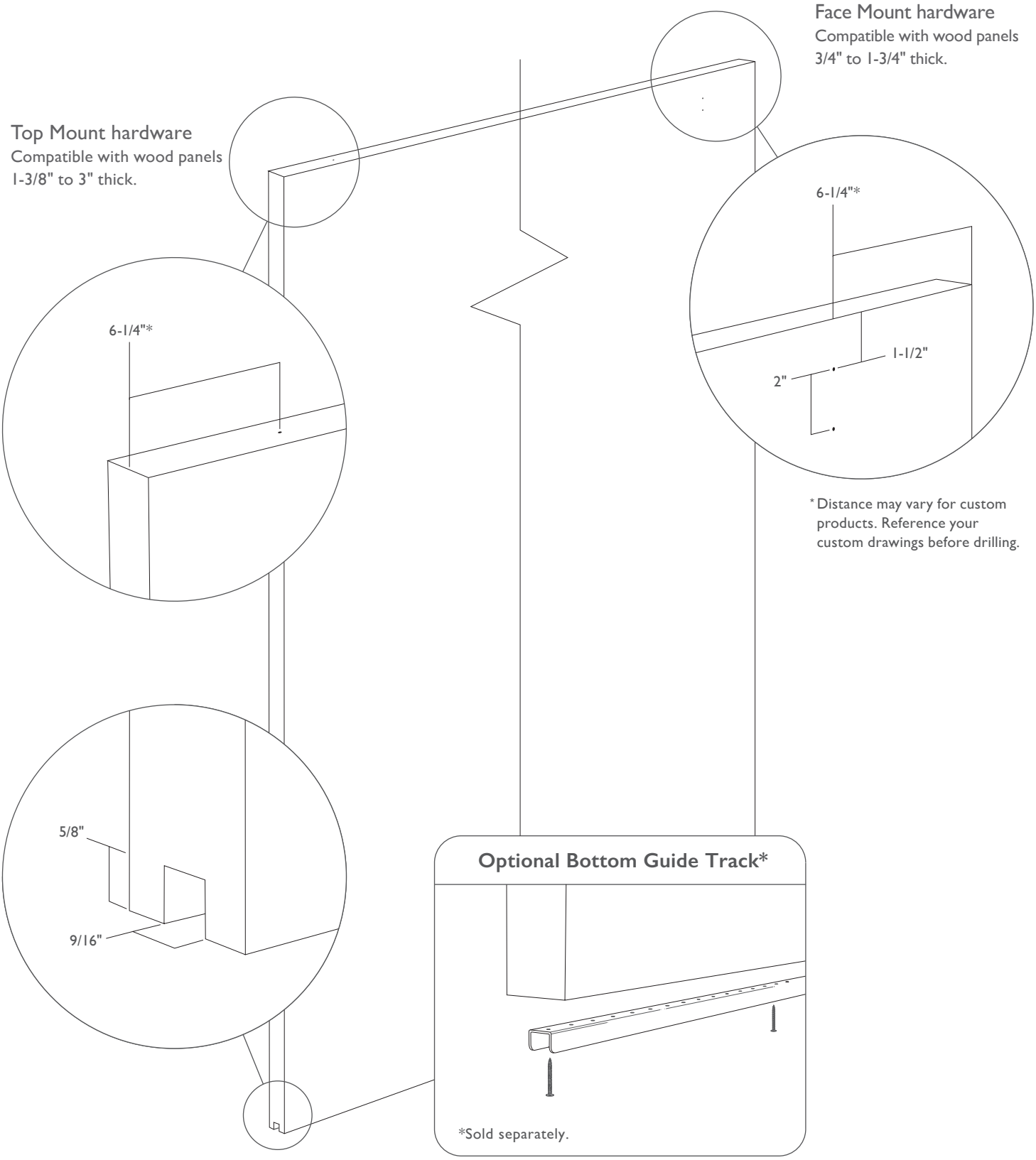

* Distance may vary for custom products. Reference your custom drawings before drilling.

© 2015 Krownlab. All rights reserved.

PANEL SPECIFICATIONS

KROWNLAB

Trolley fastener locations

① The location of your trolley fastener will determine the horizontal position of your panel.

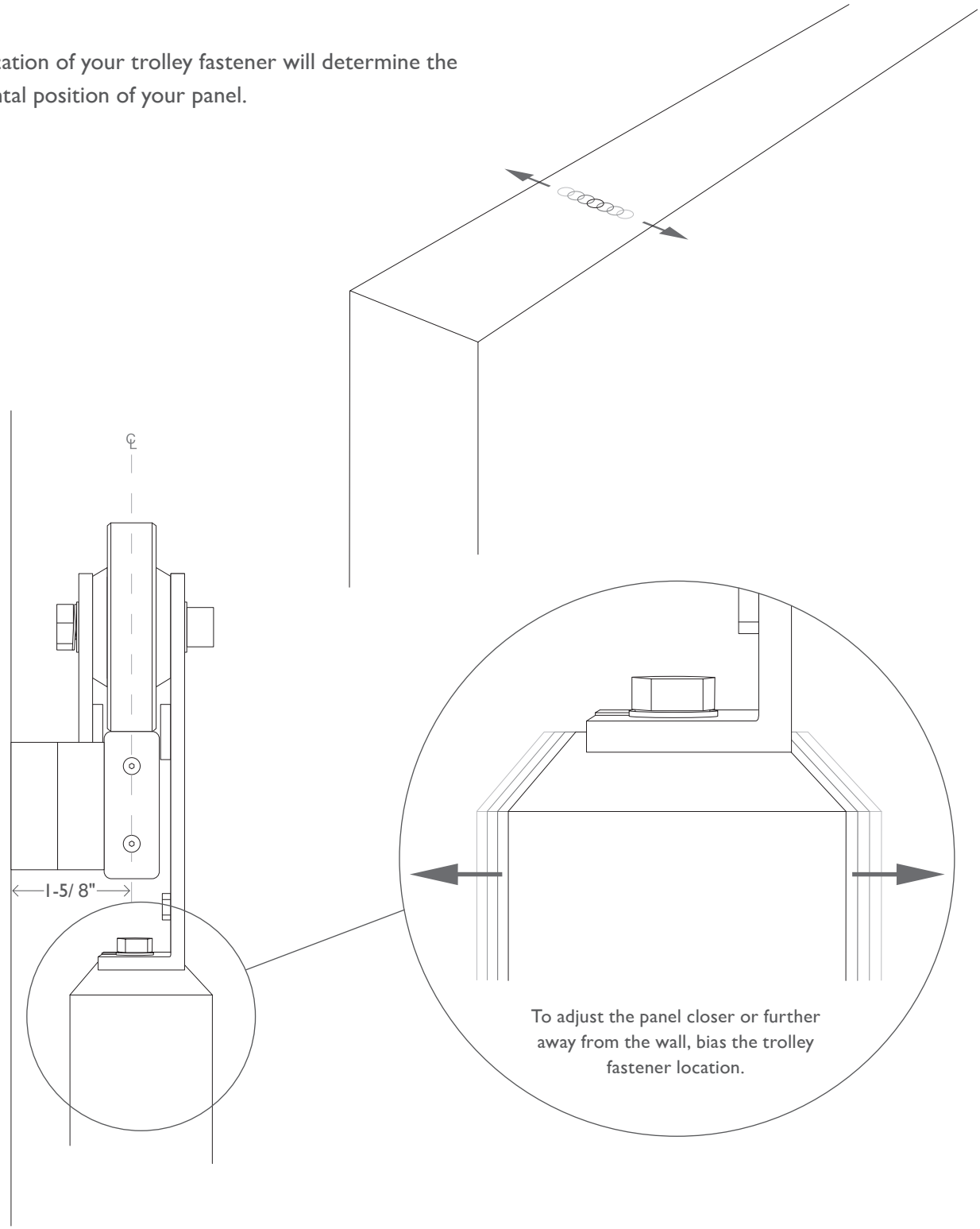

© 2015 Krownlab. All rights reserved.

DOOR INSERT INSTALLATION

KROWNLAB

Heavy Duty Door Insert

For Top Mounted door panels above 100 lbs

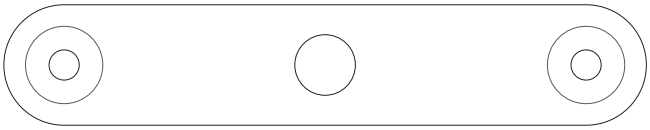

ROB ROY **ODEN** **BALDUR**

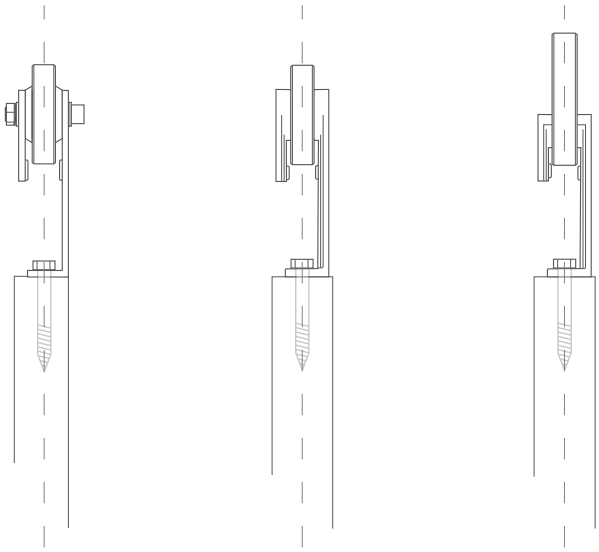

We recommend that the included Door Insert will be installed on door panels above 100 lbs by routing a recess in the top of the door panel as shown above.

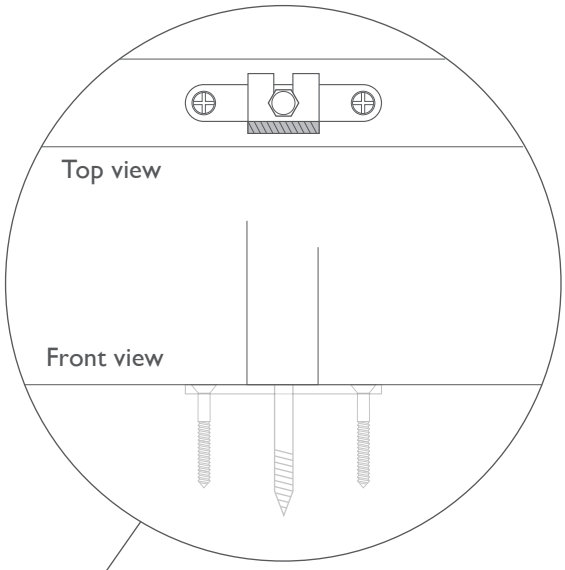

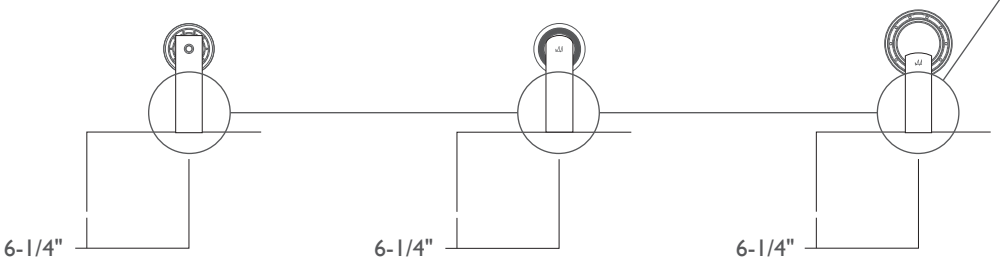

(For custom track configurations, refer to custom drawings)

© 2015 Krownlab. All rights reserved.

TROLLEY INSTALLATION

KROWNLAB

Top Mounted wood panels

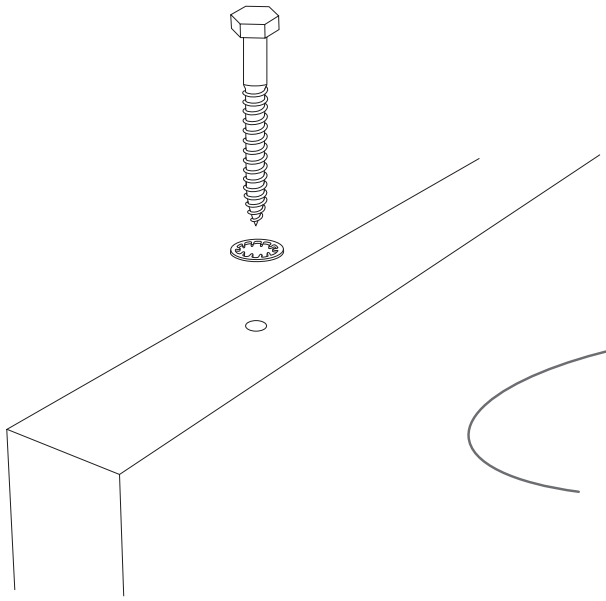

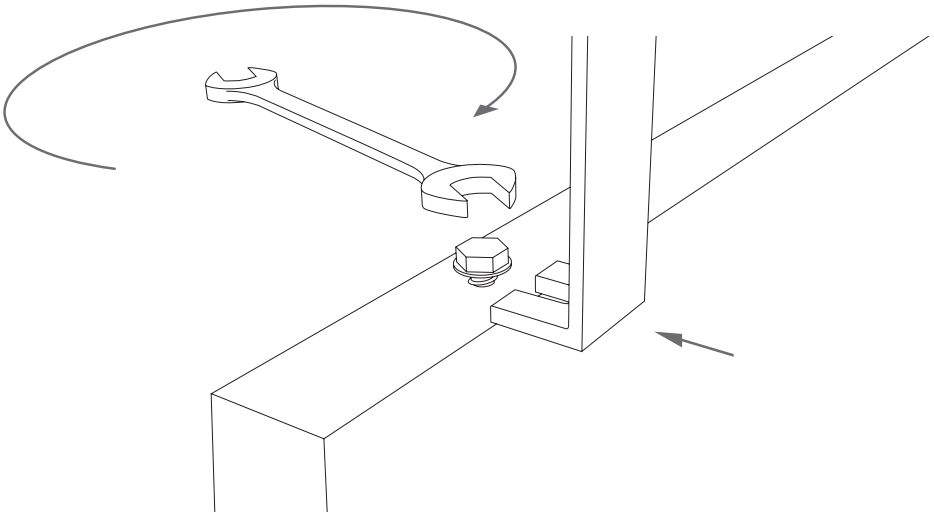

Inset A - Horizontal Adjustment

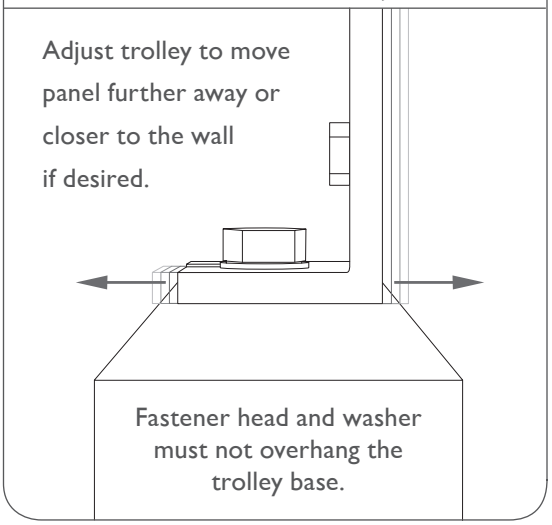

① Drill pilot hole for trolley fastener.*
② Partially install fastener.
③ Slide trolley into place as shown.
④ Confirm that the trolley is installed parallel with the door face for smooth operation.
⑤ Adjust trolley as needed, reference Inset A. Tighten fastener.
⑥ Carefully hang door panel on track.

Bearings may initially make a slight ticking noise until the lubricant is evenly distributed.

* Refer to page 7 and 8 for wood panel drill hole locations.

© 2015 Krownlab. All rights reserved.

TROLLEY INSTALLATION

KROWNLAB

Face Mounted wood panels

Maximum panel thickness is 1-3/4"

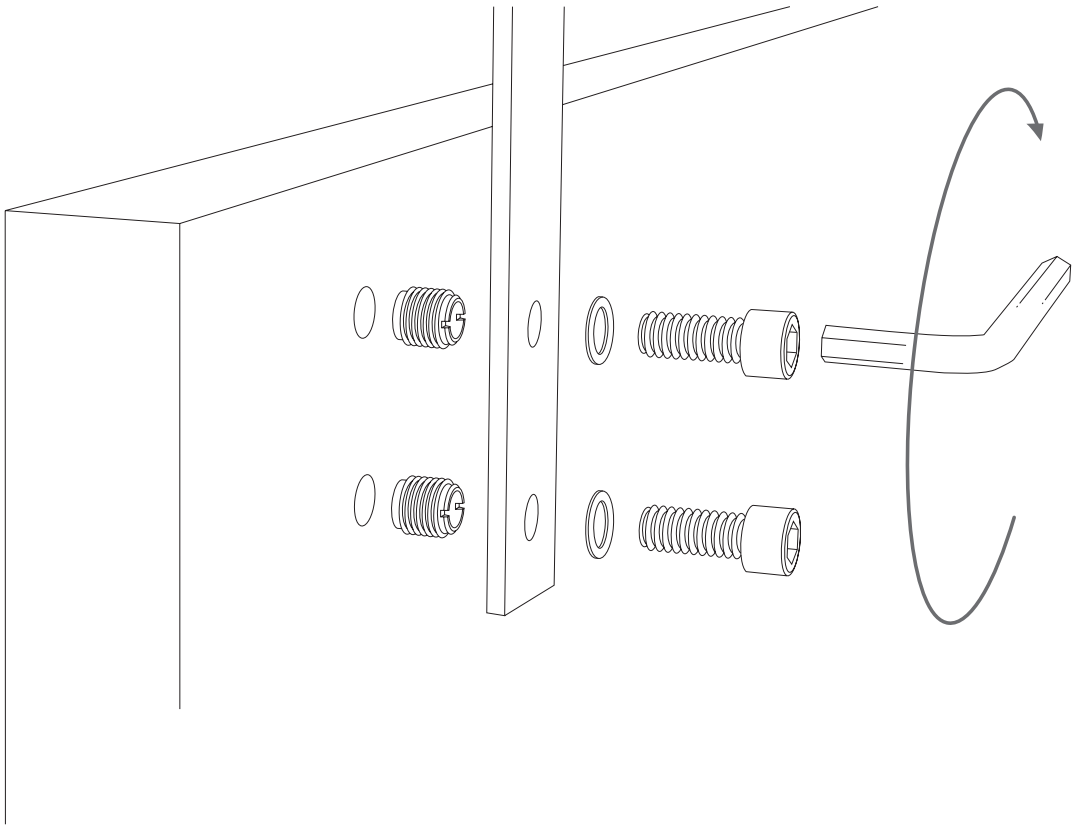

Panel Section:

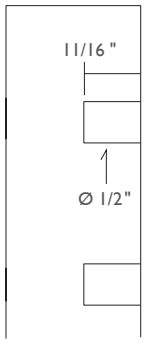

Inset A - Vertical Adjustment

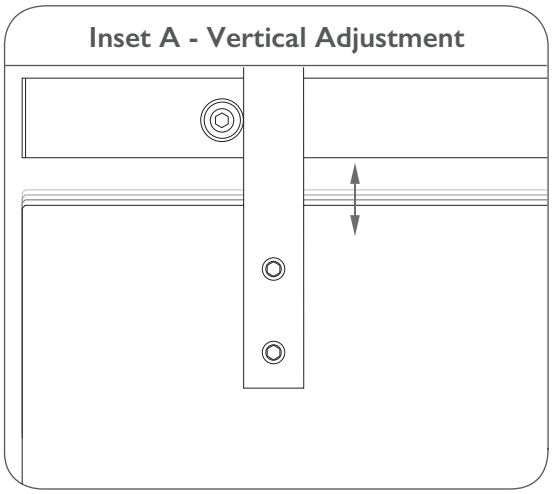

① Drill door panel according to section drawing.*
② Install trolley without tightening fasteners all the way.
③ Carefully hang door panel on track.
④ Adjust door panel vertically as needed, reference Inset A.
⑤ Tighten all fasteners.

Bearings may initially make a slight ticking noise until the lubricant is evenly distributed.

* Refer to page 7 and 8 for wood panel drill hole locations.

© 2015 Krownlab. All rights reserved.

WOOD PANEL INSTALLATION

KROWNLAB

Routed Bottom Guide Channel

Before proceeding to Final Steps, ensure bottom guide solution is implemented.
Door must not travel beyond Bottom Guide Post in either closed or open positions.

① Confirm that door panel hangs perfectly vertical, and mark position of Bottom Guide Post immediately adjacent to the door opening.
② Remove panel from track and fasten Post to floor.
③ Carefully re-hang door panel.

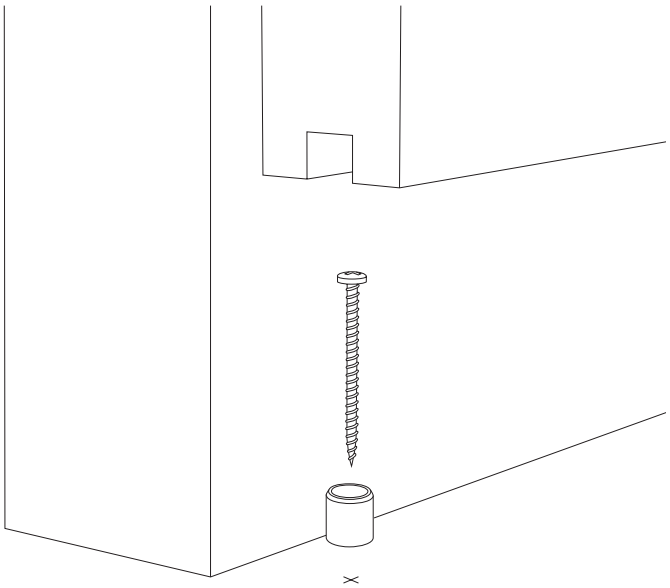

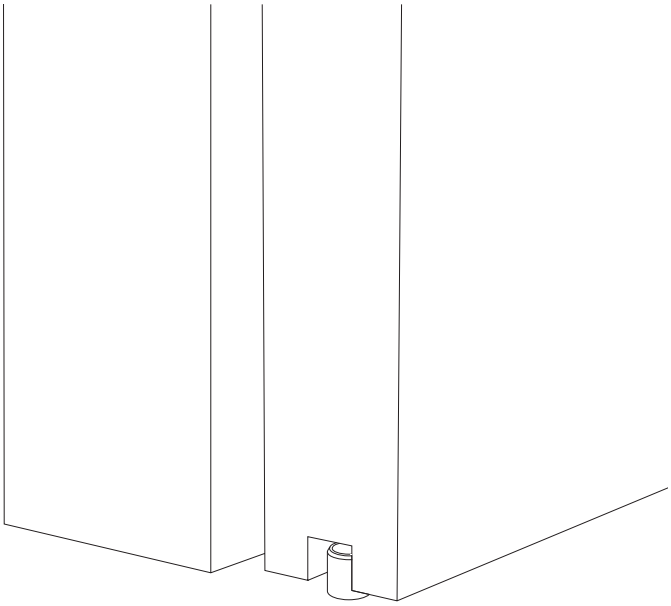

! Verify that the bottom guide post properly engages the door panel in both open and closed positions.

© 2015 Krownlab. All rights reserved.

WOOD PANEL INSTALLATION

KROWNLAB

Optional Bottom Guide Track*

Before proceeding to Final Steps ensure bottom guide solution is implemented.
Door must not travel beyond Bottom Guide Post in either closed or open positions.

① Attach Bottom Guide Track to bottom of door panel.
② Ensure that door panel hangs perfectly vertical, and mark position of Bottom Guide Post immediately adjacent to the door opening.
③ Remove panel from track and fasten Post to floor.
④ Carefully re-hang door panel.

* Sold separately, for wood doors only.

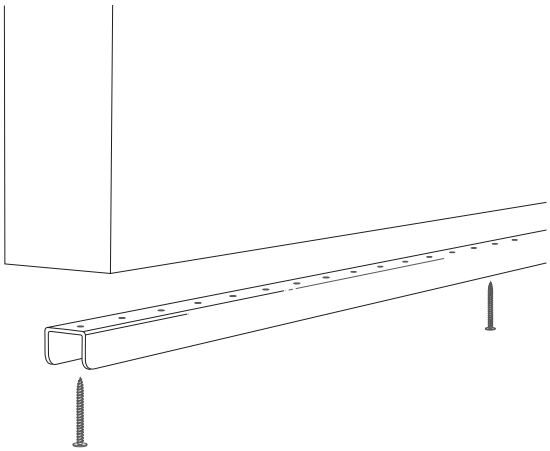

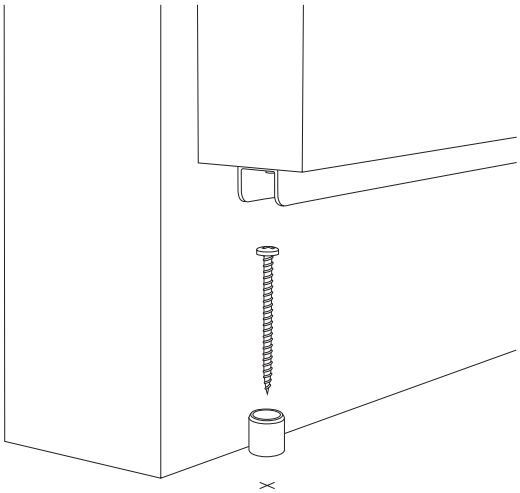

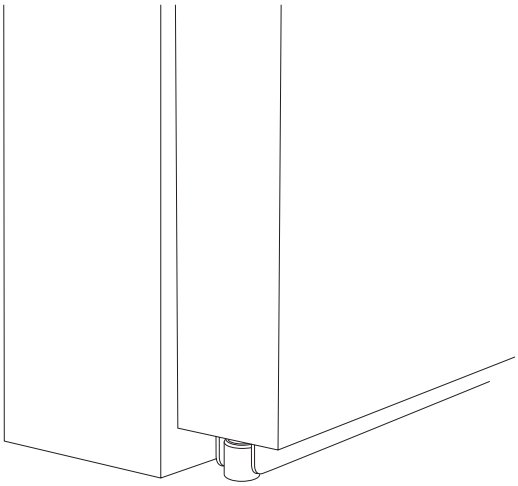

© 2015 Krownlab. All rights reserved.

GLASS PANEL SPECIFICATIONS

KROWNLAB

Drill hole locations and size

For standard systems and most custom single door opening systems.

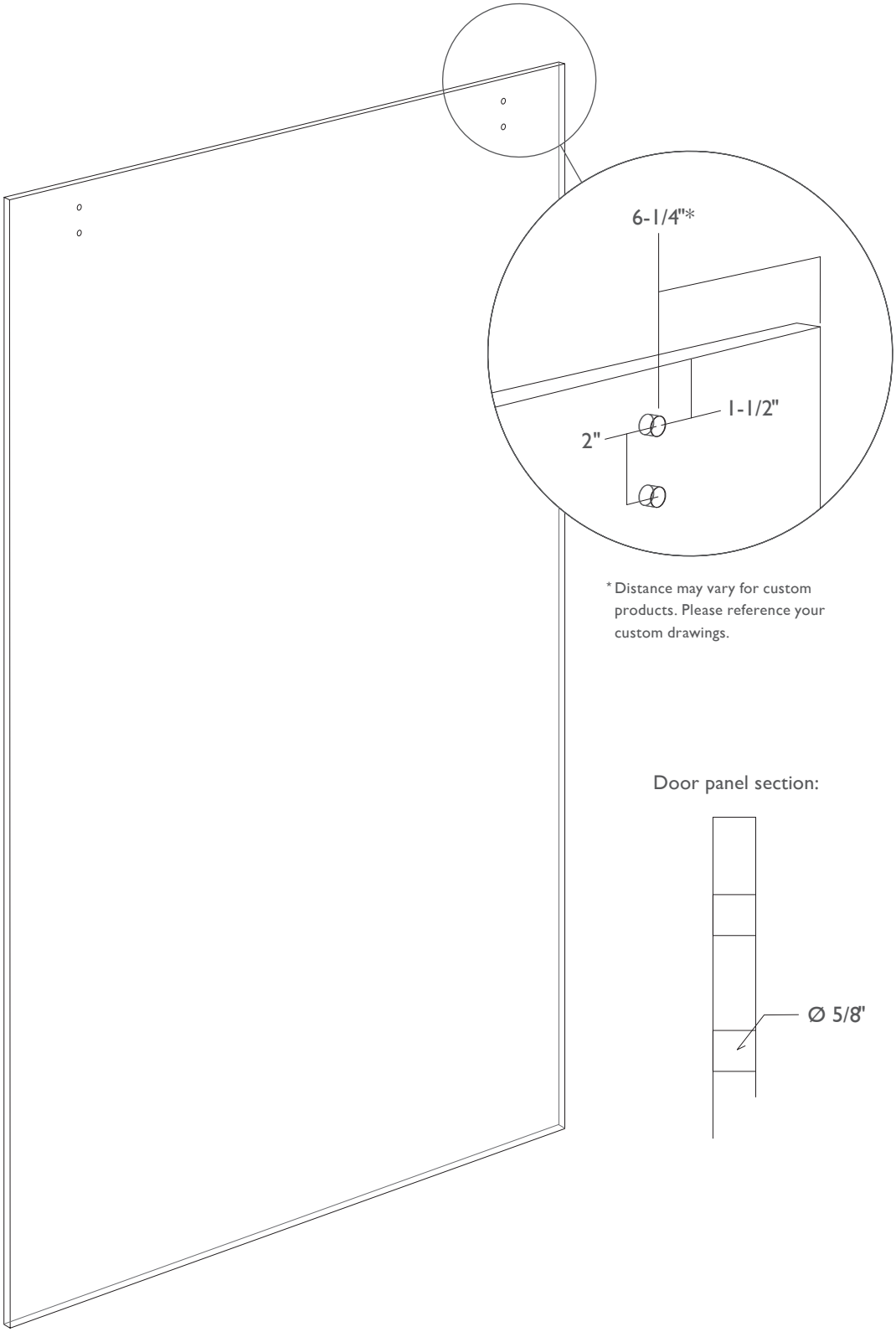

* Distance may vary for custom products. Please reference your custom drawings.

Door panel section:

© 2015 Krown Lab. All rights reserved.

TROLLEY INSTALLATION

KROWNLAB

Glass and resin panels*

Maximum panel thickness is 3/4"

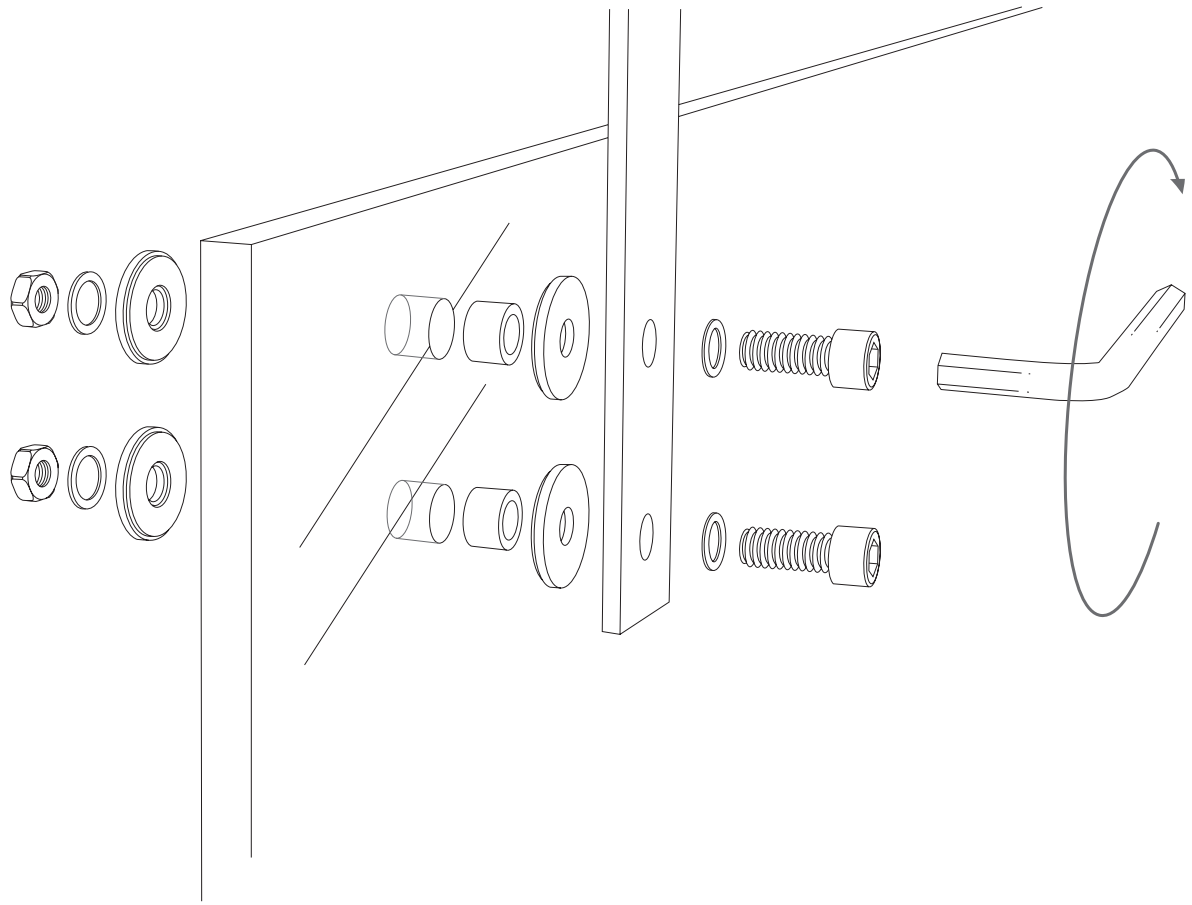

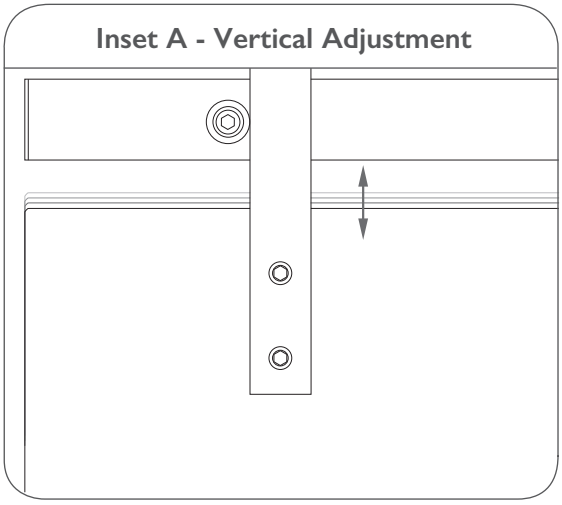

① Insert rubber bushings into holes in door panel.

② Install trolleys with rubber side of washer facing door panel.
Use 1-1/4" fasteners for door panels 3/8" to 1/2" thick.
Use 1-1/2" fasteners for door panels 9/16" to 3/4" thick.

③ Carefully hang door panel on track.

④ Adjust door panel vertically as needed, reference Inset A.

⑤ Tighten all fasteners.

Bearings may initially make a slight ticking noise until the lubricant is evenly distributed.

* Refer to page 14 for glass panel drill hole locations.

© 2015 Krownlab. All rights reserved.

GLASS PANEL INSTALLATION

KROWNLAB

Bottom Guide Glass

Before proceeding to Final Steps ensure bottom guide solution is implemented.
Door must not travel beyond Bottom Guide in either closed or open positions.

① Ensure that door panel hangs perfectly vertical, and mark position of Bottom Guide immediately adjacent to the door opening.
② Remove door panel from track and fasten Bottom Guide to floor.
③ Carefully re-hang door panel.

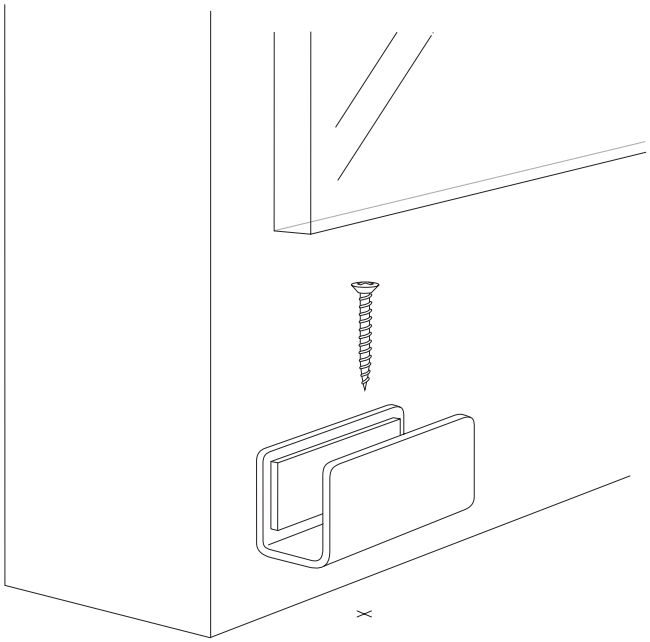

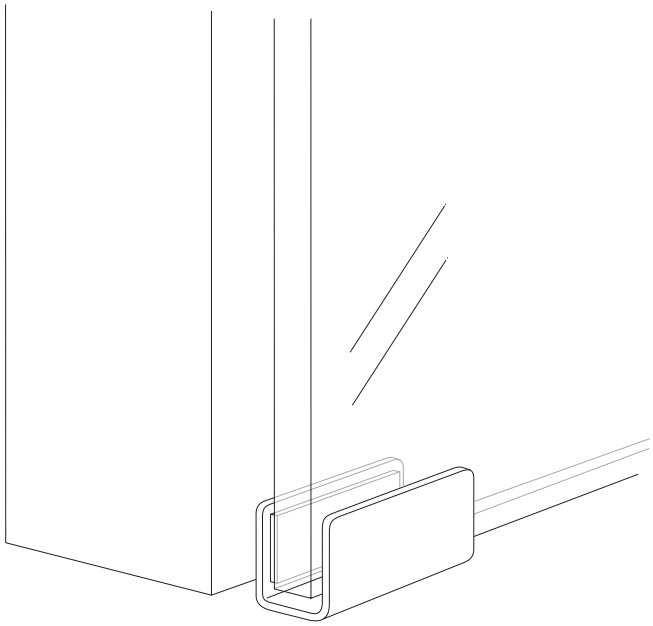

© 2015 Krownlab. All rights reserved.

FINAL STEPS

For all configurations

KROWNLAB

① Thread trolley securing mount into bracket by hand.
② Tighten screw with the provided allen wrench.

Face Mount

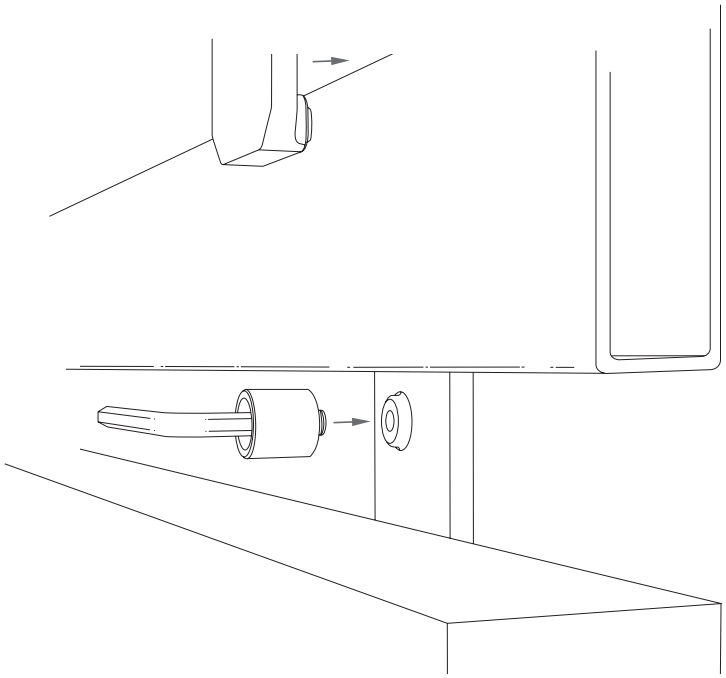

Top Mount

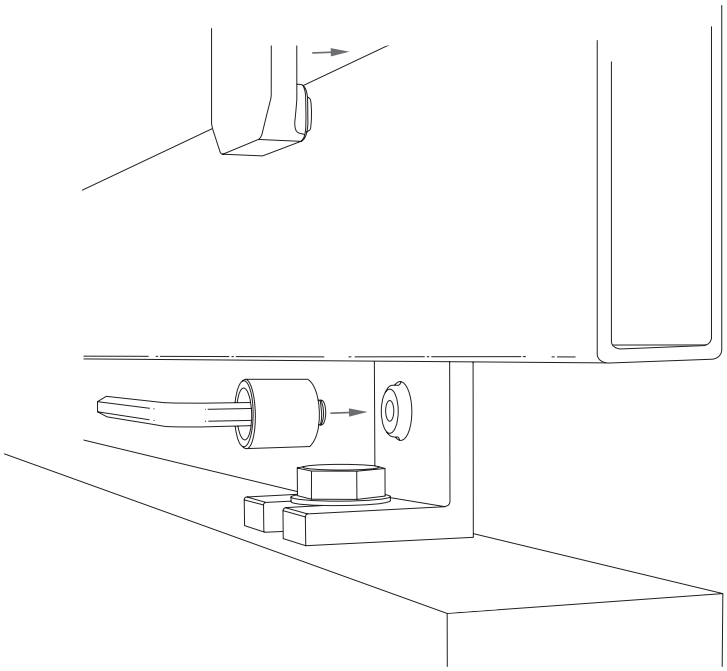

© 2015 Krownlab. All rights reserved.

PRODUCT MAINTENANCE

KROWNLAB

For all finishes

Common Parts

Wheels (bearings) should occasionally be lubricated with bearing oil
(e.g. SHC 630 Synthetic Gear and Bearing Oil by Exxon Mobil Corp: www.mobil.com).

Brushed Stainless

To clean any time after installation, use a non-abrasive lint free cloth or sponge and household glass cleaner.
(Remember to test an inconspicuous area prior to cleaning hardware.)
Do not use steel wool, or a Scotch Brite pad, as it can scratch the product.

Black Stainless

To enhance the depth and shine of the finish, periodically apply a thin coating of petroleum jelly with a clean cloth, buff clean and dry. Do not use steel wool, or a Scotch Brite pad, as it can scratch the product.

Polished Stainless

To clean any time after installation, gently wipe down with a clean non-abrasive, lint-free cloth. Stainless steel cleaner (spray) or water can also be used to dampen cloth. Do not let any polished surface come into contact with abrasive materials as the finish can scratch.

Bamboo

Apply a fresh coat of BioShield Wood Counter Finish or a mineral oil once or twice a year.

© 2015 Krownlab. All rights reserved.

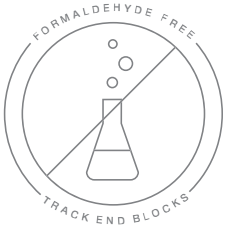

All of our packaging materials are recyclable.
Please help us conserve precious resources by disposing of our packaging to the best of your abilities.